INSTALLATION, OPERATION, MAINTENANCE, AND PARTS LIST

SERIES I
MILLING MACHINES

TP8035A

Revised: March 21, 2018

Manual No. M-508
Part No. M -0009500-0508

Litho in U.S.A.
June, 2010

Information in this manual is subject to change without notice.

This manual covers installation, operation, maintenance, and parts list for Bridgeport Series I milling machines with serial numbers ending with the letter "M". The machine serial number is located on the front of the knee. If the machine serial number does not end with the letter "M", refer to the latest version of manual M -0009500-0450.

In no event will Hardinge Inc. be responsible for indirect or consequential damage resulting from the use or application of the information in this manual.

Reproduction of this manual, in whole or in part, without written permission of Hardinge Inc. is prohibited.

ORDERING REPLACEMENT PARTS

Please provide the following information when ordering replacement parts:

1. The complete machine serial number. The machine serial number is located on the front of the knee.
2. List the following:
   A) Manual Number (M-508).
   B) Page Number.
   C) Item Number.
   D) Part Description.
   E) Part Number.
   F) Quantity of each part required.
3. Specify how and where to ship.

- NOTE -

Bridgeport is a registered trademark of Hardinge Inc.

SAFETY PRECAUTIONS

To prevent serious bodily injury, observe the following basic safety precautions when installing, operating or servicing the milling machine.

1. Follow all instructions in the manual.
2. Wear approved industrial safety glasses and safety shoes.
3. Do not wear gloves, long sleeves, long hair, rings, watches, jewelry or other items that could become caught in moving parts.
4. Keep all parts of your body away from moving parts (belts, cutters, gears, etc.)
5. Use proper point of operation safeguarding.

These and other safety precautions are discussed in the American National Standard Institute standard entitled Safety Requirements for Manual Milling, Drilling and Boring Machines with or without Automatic Control (ANSI B11.8-2001).

This publication is available from:

American National Standards Institute
25 West 43rd Street, 4th floor
New York, NY 10036

To assist machine users in designing point of operation safeguarding for their specific machine applications, the Occupational Safety And Health Administration has published a booklet entitled Concepts and Techniques of Machine Safeguarding (OSHA Publication No. 3067).

This publication is available from:

U.S. Department of Labor
OSHA Publications Office
200 Constitution Avenue, NW
Room N3315
Washington, D.C. 20210

The general purpose point of operation shield provided with this machine and shown in certain illustrations throughout this manual may not be appropriate and cannot be utilized for all possible applications of the machine. Use additional or alternate safeguarding where this shield is not appropriate or cannot be utilized. Note that for purposes of display, the shield has been removed in certain other illustrations in this manual.

CALIFORNIA PROPOSITION 65 WARNING

WARNING: California Residents

Product can expose you to chemicals including one or more listed chemicals which are known to the State of California to cause cancer or birth defects or other reproductive harm. For more information, go to www.P65Warnings.ca.gov

CONVENTIONS USED IN MANUALS

DANGER

DANGER indicates a hazardous situation that, if not avoided, will result in death or serious injury.

WARNING

WARNING indicates a hazardous situation that, if not avoided, could result in death or serious injury.

CAUTION

CAUTION indicates a hazardous situation that, if not avoided, could result in minor or moderate injury.

NOTICE

NOTICE indicates a situation that, if not avoided, could result in damage to the machine, tooling, or workpiece.

- NOTES -

Notes contain supplemental information.

SAFETY RECOMMENDATIONS

DO NOT OPERATE EQUIPMENT until you have read and understood the appropriate operator and safety maintenance manuals.

DO NOT OPERATE EQUIPMENT until you have read and understood all machine and control key signs.

DO NOT OPERATE EQUIPMENT for the first time without a qualified instructor. Consult your supervisor when in doubt as to the correct way to perform an operation.

DO NOT OPERATE EQUIPMENT unless proper maintenance has been regularly performed and the equipment is known to be in good working order.

DO NOT ALLOW the operation or repair of equipment by untrained personnel.

WARNING or INSTRUCTION TAGS are mounted on the equipment for your safety and information. Do not remove them.

DO NOT OPERATE EQUIPMENT if any unusual or excessive heat, noise, smoke, or vibration occurs. Report any excessive or unusual vibration, sounds, smoke, or heat as well as any damaged parts.

WEAR SAFETY GLASSES with side shields and SAFETY SHOES with steel toes and oil-resistant soles at all times. When necessary, wear respirator, helmet, and ear muffs or plugs.

DO NOT OPERATE ANY MACHINE while wearing rings, watches, jewelry, loose clothing, neckties, or long hair not contained by a net or shop cap.

DO NOT WEAR GLOVES while operating equipment. Gloves are easily caught in moving parts.

REMOVE ANY LOOSE PARTS OR TOOLS left on machine or in the work area before operating the machine. Always check the machine and work area for loose tools and parts, especially after work has been completed by maintenance personnel.

REMOVE CHUCK WRENCHES before starting the machine.

NEVER OPERATE A MACHINE after taking strong medication, using non-prescription drugs or consuming alcoholic beverages.

SAFEGUARD THE CUTTING ZONE (“point of operation”). Use standard, general purpose safeguards when possible. Use special safeguards when required.

PROTECT YOUR HANDS. Stop the spindle completely before changing tools.

PROTECT YOUR HANDS. Stop the spindle completely before loading or unloading a workpiece.

DO NOT REMOVE CHIPS with hands. Use a hook or similar device and make certain that all machine movements have ceased.

DO NOT ADJUST tooling, workpieces or coolant hoses while the machine is running.

PROTECT YOUR HANDS. Stop the spindle completely before taking measurements.

PROTECT YOUR HANDS. Stop the spindle completely before opening safeguards or covers.

NEVER REACH around a safeguard.

PROTECT YOUR HANDS. Stop the machine before changing or adjusting belts, pulleys or gears.

PROTECT YOUR HANDS. Keep hands and arms clear of spindle start switch when changing tools.

PROTECT YOUR EYES AND THE MACHINE. Never use a compressed air hose to remove chips.

KEEP WORK AREA WELL LIGHTED. ask for additional light if needed.

DON'T SLIP. Keep your work area clean and dry. Remove chips, oil and obstacles.

NEVER LEAN ON your machine. Stand away when the machine is running.

MAKE CERTAIN that you are clear of any "pinch points" created by moving slides before starting the machine.

PREVENT OBJECTS from flying loose. Securely clamp and locate workpiece. Use stop blocks where necessary. Keep clamps clear of cutter path.

PREVENT CUTTER BREAKAGE. Use correct table feed and spindle speed for the job. Reduce feed and speed if you notice unusual noise or vibration.

PREVENT CUTTER BREAKAGE. Rotate spindle in clockwise direction for right-hand tools, counterclockwise for left-hand tools. Use the correct tool for the job.

PREVENT WORKPIECE and cutter damage. Never start the machine when the cutter is in contact with the workpiece.

DO NOT USE worn or defective tools. Use the proper size and type of tool for the task at hand.

KEEP ROTATING CRANKS AND HANDWHEELS well lubricated and maintained. Do not remove safety springs.

CERTAIN MATERIALS, such as magnesium, are highly flammable in dust and chip form. See your supervisor before working with these materials.

PREVENT FIRE. Keep flammable liquids and materials away from work area and hot chips.

PREVENT MACHINE from moving unexpectedly. Disengage power feed when not being used (manual machines only).

PREVENT MACHINE from moving unexpectedly. Always start machine in manual mode.

UNLESS OTHERWISE NOTED, all operating and maintenance procedures are to be performed by one person. To avoid injury to yourself and others, be sure that all personnel are clear of the machine when opening or closing the coolant guard door and any access covers.

INSTALLATION AND USE OF SAFEGUARDS

Both American National Standard B11.8 and OSHA Section 1910.212 assign responsibility for point of operation safeguarding of milling machines to the employer/user. Therefore, to prevent serious injury resulting from the rotating cutter, flying chips, or splashing coolant, point of operation safeguarding should be used on milling machines to the greatest extent practicable.

This booklet provides basic information for the installation and use of the general purpose safeguard. It also contains the names of several manufacturers of other types of point of operation safeguarding for vertical milling machines.

Remember, point of operation safeguarding is your responsibility as the employer/user. You are in the best position to evaluate your safeguarding needs and ensure that the proper safeguards are installed and used.

WARNING

This safeguard DOES NOT take the place of any other safety practice or safety equipment.

YOU MUST ALWAYS wear safety glasses and safety shoes.

YOU MUST ALWAYS stop the spindle of the machine completely before changing or adjusting the workpiece, fixture, or tool.

YOU MUST NEVER wear gloves, long sleeves, long hair, rings, watches, neckties, jewelry or other loose items.

CAUTION

A safety shield is supplied for protection from chips and coolant with every machine.

The chip and coolant shields have been designed and are custom manufactured with the highest clear impact material commercially available: polycarbonate (G.E. Lexan). It has an impact strength 5 to 10 times greater than acrylic (plexiglass) or butyrate (UVEX) materials, thereby offering the greatest protection for our customers.
Some of the new “easy to dispose of” coolants and/or cutting oils contain chemicals harmful to polycarbonate. These chemicals are: Mono-ethanolamine, Di-ethanolamine, Tri-ethanolamine and the combination thereof. These chemicals may significantly reduce the impact strength of the shield within days, and could destroy the entire shield in weeks.

Use of use of coolants and/or cutting oils containing these chemicals will void the warranty on your safety shield, and could cause injury to your workers.

GENERAL PURPOSE SAFEGUARDS

There is no single safeguard which can match the versatility of the Series I machine. As a result, you will find that the guard assembles shown in Figures I.I and I.II, like all safeguards, will be suitable for some operations, but not for others. Carefully analyze the operation to be performed before deciding whether this safeguard is suitable. Adjust the safeguard to suit your special requirements. If you find that it is not suitable for a particular application, you should use an alternate form of protection.

Installation for Machines with R-8 Spindle Taper

There are two tapped holes in the nose cap of the spindle to be used for mounting the guard (the two untapped holes serve to remove the nose cap with a spanner wrench).

1. Place the mounting ring (Item 11) underneath the top of the guard (Item 7).
2. Place two socket head cap screws (Item 12) through the holes in the ring, and hand-start them into the threaded holes in the nose cap until hand tight.
3. Align guard to be square with table of machine (unless angular mounting is desired).
4. Tighten screws with a hex Allen wrench.

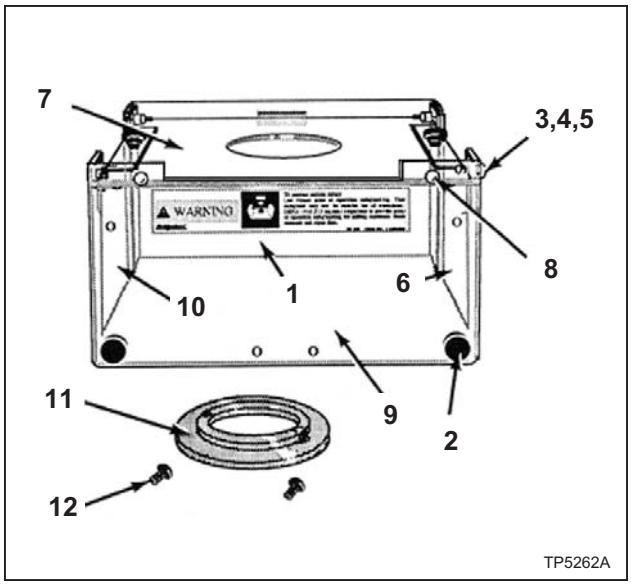

Figure I.I - Spindle Guard Assembly
(R8 Spindle)

Installation for Machines with Erickson 30 Quick Change Spindles

1. Remove the spindle locknut. This is done by removing the long button head black finish screw, which is normally left of the cadmium-finished button head screw on the locknut of the spindle. This will allow you to unscrew the locknut by turning it counter-clockwise.
2. Place the nose cap mounting ring “O” up against the quill nose cap and install the four button head cap screws “M”.

- NOTE -

The counterbored side of the nose cap mounting ring fits against the nose cap.

Observe the orientation of the mounting holes in the spindle and the mounting ring to orient the quill guard as desired.

3. Place the mounting ring (Item 11) on the top of the guard (Item 7).
4. Place the locking ring (Item 12) underneath the top of the guard (Item 7).
5. Secure the two rings together with four #8-32 x 5/8 button head cap screws.
6. Lower the quill.
7. Position the guard under the spindle.
8. Use four #8-32 x 1/2 button head cap screws to secure the guard to the spindle.
9. Reinstall the quick change locknut. Refer to assembly instructions.

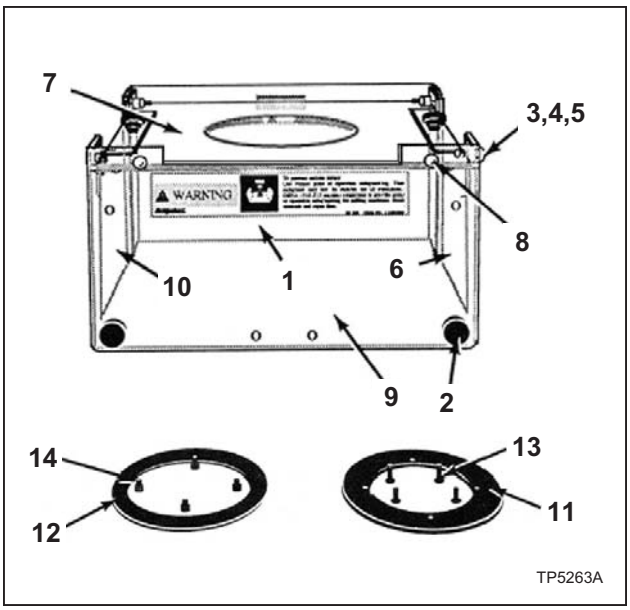

Figure I.II - Spindle Guard Assembly

Guard Assembly Component Lists

BP 11060813 – R-8 SHIELD ASSEMBLY

Refer to Figure I.I.

Item	Part Number	Description	Qty
1	BP 11191203	Shield Assembly, Rear	1
2	BP 11010060	Screw, Hand 8-32 x .500	4
3	0300312	Screw, BHC 10-32 x .750	4
4	BP 11010065	Washer, Plastic #10-32	8
5	BP 11010055	Nut, Stop, #10-32 (Elastic)	4
6	BP 11060824	Shield, Right Side	1
7	BP 11060817	Shield Assembly, Top	1
8	BP 11010063	Screw, Drive, "Type U" #12 x .625	2
9	BP 11060820	Shield Assembly, Front	1
10	BP 11060822	Shield, Left Side	1
11	BP 11191201	Ring, Guard Mounting	1
12	0100610	Screw, SHC 1/4-20 x 5/8	2

BP 11060814 – QUICK CHANGE SHIELD ASSEMBLY

Refer to Figure I.II.

Item	Part Number	Description	Qty
1	BP 11191203	Shield Assembly, Rear	1
2	BP 11010060	Screw, Hand 8-32 x .500	4
3	0300312	Screw, BHC 10-32 x .750	4
4	BP 11010065	Washer, Plastic #10-32	8
5	BP 11010055	Nut, Stop, #10-32 (Elastic)	4
6	BP 11060824	Shield, Right Side	1
7	BP 11060816	Shield Assembly, Top	1
8	BP 11010063	Screw, Drive, "Type U" #12 x .625	2
9	BP 11060820	Shield Assembly, Front	1
10	BP 11060822	Shield, Left Side	1
11	BP 12190330	Ring, Guard Mounting	1
12	BP 12190331	Ring, Guard Locking	1
13	0300208	Screw, BHC #8-32 x 1/2	4
14	0300210	Screw, BHC #8-32 x 5/8	4

- NOTES -

- NOTES -

Table of Contents

CHAPTER 1 - INSTALLATION

Uncrating . . . 1-1
Shortages . . . 1-1
Cleaning . . . 1-1
Positioning the Head Upright . . . 1-2
Lifting the Machine . . . 1-4
Foundation . . . 1-5
  Placing on a Solid Foundation . . . 1-5
    Leveling Bolts and Pads . . . 1-5
    Machine Hold-Down Bolts . . . 1-5
  Leveling the Machine . . . 1-6
Remove the Varidisc Shipping Screws . . . 1-7
Machine Power Supply . . . 1-8
  Connecting the Power Supply . . . 1-8
Lubrication . . . 1-9
Alignment of the Head for Fine Work . . . 1-10

CHAPTER 2 - OPERATION

Head Controls . . . 2-1
  High-Low Range Switch . . . 2-2
  Variable Speed Dial . . . 2-2
  Spindle Brake . . . 2-3
  Quill Feed Selector . . . 2-3
  Quill Stop Knob . . . 2-4
  Micrometer Nut . . . 2-4
  Feed Reverse Knob . . . 2-4
  Manual Feed Handwheel . . . 2-4
  Feed Control Lever . . . 2-5
  Feed Control Overload Clutch . . . 2-5
  Quill . . . 2-5
  Spindle . . . 2-5
  Quill Lock . . . 2-5
  Quill Feed Handle . . . 2-6
  Power Feed Transmission Engagement Crank . . . 2-6
  Hi-Neutral-Lo Lever . . . 2-7
  Speed Change Handwheel . . . 2-8
  Drawbar . . . 2-9
  Operational Procedures . . . 2-10
    Spindle Speed . . . 2-10
    Back Gear (Low Speed) . . . 2-10
    Direct Drive (High Speed) . . . 2-11
    Quill Feed . . . 2-11
    Spindle Brake . . . 2-13
    Quill Sensitive Hand Feed . . . 2-13

Machine. 2-14
Swivel the Belt Housing 2-14
Swivel the Turret 2-14
Move the Ram Slide 2-15
Saddle Clamping 2-15
Table Clamping 2-16
Knee Clamping 2-16

CHAPTER 3 - MAINTENANCE

2J-Head. 3-1
Motor Removal 3-1
Drive Belt Replacement 3-2
Timing Belt Replacement 3-2
Brake Shoe Replacement 3-3
Head 3-4
Micro Feed Trip Assembly and Quill Removal 3-4
Balance Spring Replacement 3-5
Feed Trip Adjustment 3-5
Collet Aligning Screw Replacement 3-6
Gib Adjustment 3-7
Adjustment of the Table Gib 3-7
Adjustment of the Saddle Gib 3-8
Adjustment of the Knee Gib 3-10
Table Feed Screw Backlash Adjustment 3-12
Saddle Feed Screw Backlash Adjustment 3-13

CHAPTER 4 - PARTS LISTINGS

2J-Head
Top Housing 4-1
Back Gear 4-4
2J- and J-Head Lower Housing 4-7
Basic Machine. 4-12
Table and Lead Screw Assembly 4-15
Flood Coolant 4-17
Lubrication System 4-18
Standard Machine 4-18
Machine with Splashguard Option 4-19
Replacement Motor Assemblies. 4-20
Motor Assembly 2J-Head 2 HP Unified without NFPA, BPA12550001 4-20
Motor Assembly 2J-Head 2 HP Unified with NFPA 4-20
Replacement Motors 4-20
2J Milling Head 4-21
1-1/2 HP – Spare Parts 4-21
2 HP – Spare Parts. 4-21
Metric Conversion Kit 4-21
BP 2184000 – 2J-Head, Metric Conversion Kit 4-21
NFPA Electrical Case (Option) 4-22

CHAPTER 5 - SPECIFICATIONS

Machine. 5-1
Principle Dimensions 5-1
Left Side View of Machine 5-1
Top View of Machine 5-2
Machine Specifications 5-3
2J-Head. 5-5
General Speed Recommendations 5-5
Table of Cutting Speeds and Feeds 5-5

DOCUMENT REVISION RECORD

- NOTES -

CHAPTER 1 - INSTALLATION

UNCRATING

Carefully remove protective crating and skids so that the machine and parts are not marred, scratched or impaired. In the event of damage having occurred during transit, communicate at once with our representative and the transportation company making delivery.

SHORTAGES

Check shipment carefully against the itemized packing list which is included in the parts box. In case of shortages, report them immediately to the representative from whom the machine was purchased, indicating the parts not received which have been checked on the packing list.

CLEANING

Thoroughly clean protective coating from the machine with a suitable cleaning solution.

WARNING

DO NOT use gasoline or any other flammable cleaning agent to clean machine.

- NOTE -

Do not move the table, saddle, knee, or any moveable part until all ways have been well cleaned and lubricated.

1. After initial cleaning, move table, saddle and knee in one direction by hand to limit stop.
2. Clean and lubricate the exposed ways.
3. Move each unit to the opposite limit stop, and clean and lubricate the exposed ways.
4. Move each unit to the opposite stop once more and similarly clean and lubricate the exposed ways.
5. Loosen bolts to unlock the ram, and move it forward and backward to the full length in order to clean and lubricate.

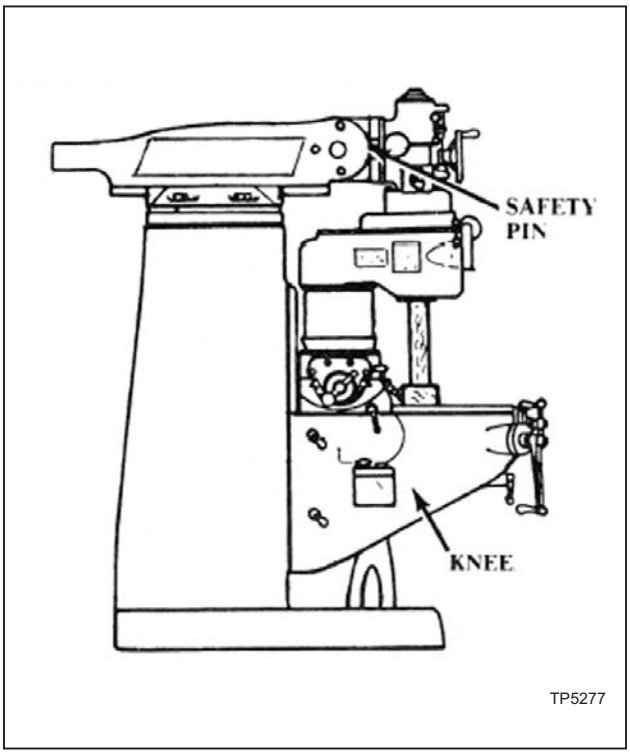

Figure 1.1 - Milling Machine
Left Side View

POSITIONING THE HEAD UPRIGHT

If delivery of your machine is made with the milling head in an upside-down position, follow the instructions below to prepare your machine for operation.

For shipping purposes, the hand cranks are inverted to face the machine. To reverse them, engage the lock mechanism to the saddle and table. Using a (1-inch) wrench, remove the retaining lead screw nut and install the hand cranks properly.

Loosen four head mounting bolts “C”, Figure 1.3, and pull stop pin “A”, Figure 1.2, out to detent and rotate head attachment using the swivel bolt “B”, Figure 1.3, in either direction until it has been moved within approximately 20% of vertical. It is recommended supporting the head by hand to relieve the weight on the swivel bolt, as a safety precaution, push the stop pin back in. Continue to raise the head attachment to vertical position. Align the indicator on the head attachment with the ZERO line on the ram adapter scale. Tighten all nuts first to 25 lb-ft torque in a diagonal sequence, then to 50 ft/lbs.

- NOTE -

Care should be taken to avoid excessive pressure since this will cause distortion in the quill.

1. Lower knee approximately 6” (150mm).
2. Withdraw the safety pin on the left-hand side of ram adapter.
3. Loosen the four unit head mounting bolts.
4. Support unit head manually and use a spanner on swivel bolt to wind into upright position.
5. Press the safety pin back into the ram adapter after passing the 25° mark.
6. Tighten bolts first to 25 lb-ft torque in a diagonal sequence as noted in Figure 1.4, then to 50 lb-ft. Overtightening could cause bind in the quill movement.

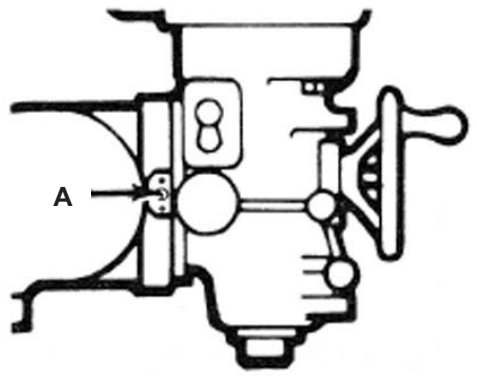

Swiveling Head
To Swivel the Head More Than 25°, the Safety Pin “A” Must be Pulled Outwards

TP5278A

Figure 1.2 - Positioning Head Left View

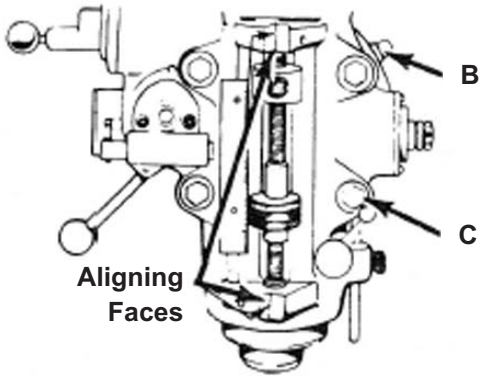

TP5278B

Figure 1.3 - Positioning Head Front View

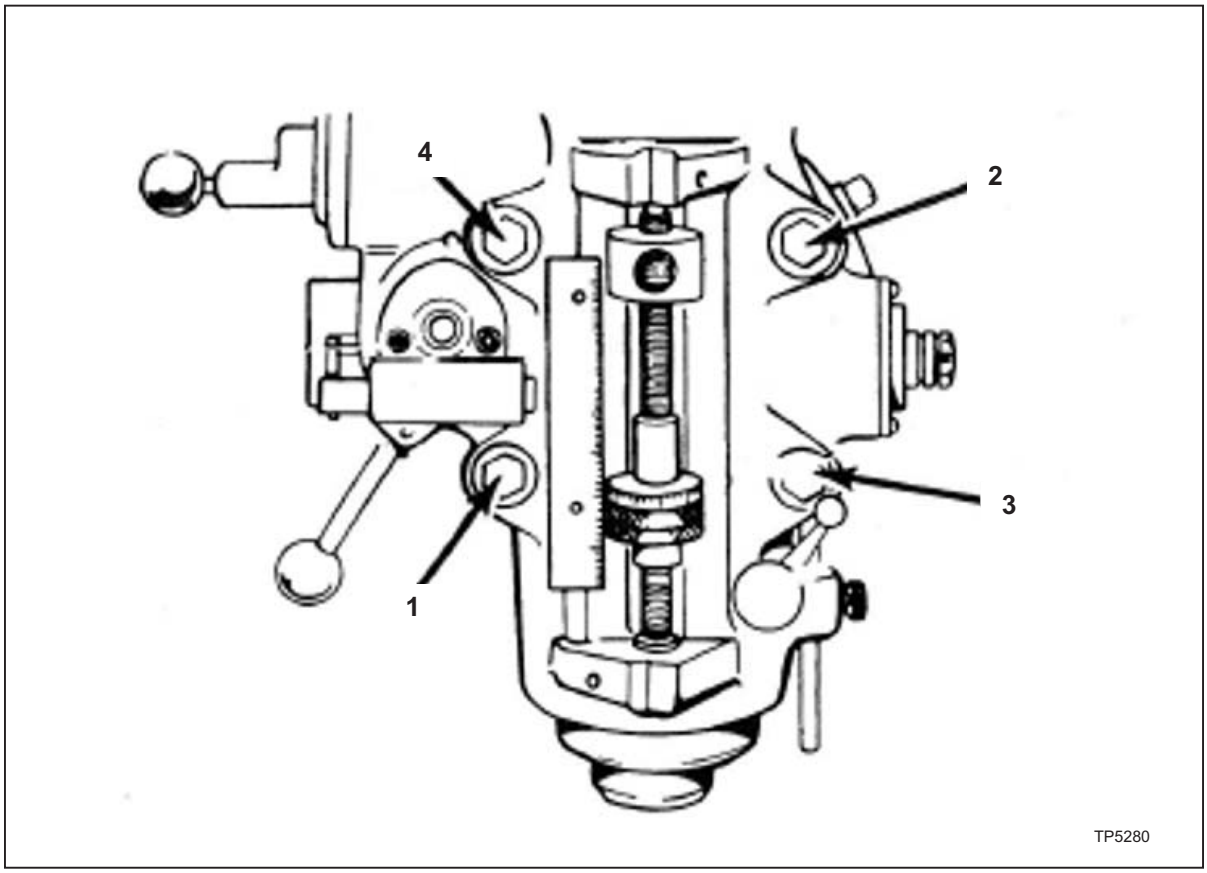

Figure 1.4 - Tightening Sequence

LIFTING THE MACHINE

WARNING

BE SURE to use proper sling when lifting. improper lifting could cause serious injury.

Note position of ram and table when lifting with sling. Machine should be lifted by placing a sling under the ram as illustrated in Figure 1.5.

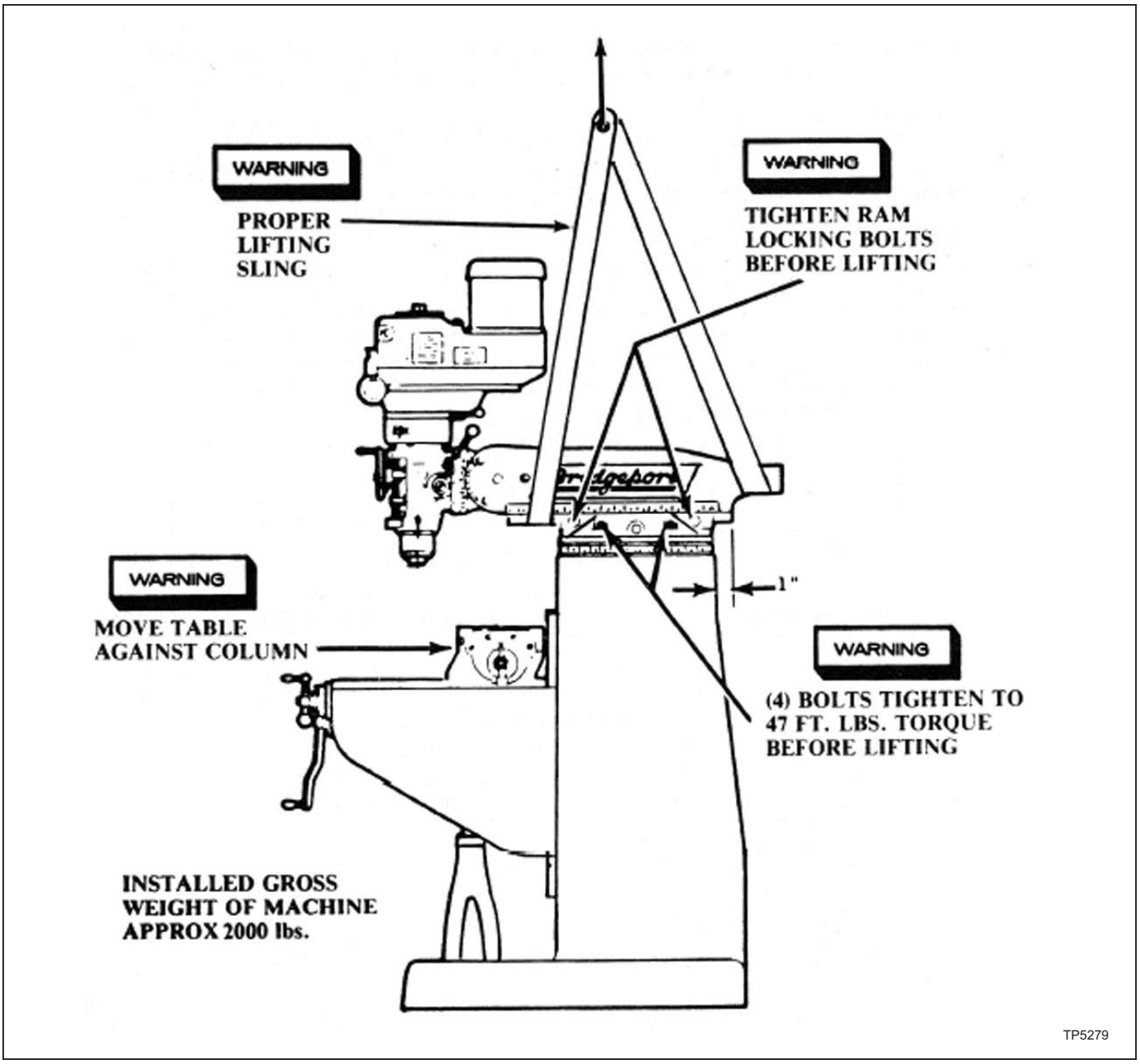

Figure 1.5 - Lifting the Machine

FOUNDATION

PLACING ON A SOLID FOUNDATION

- NOTE -

It is recommended that the machine be secured to the floor to prevent movement or tipping due to off-center loading. It is the customers responsibility to supply all necessary hardware if the machine is to be secured to the floor.

When setting machine on a concrete foundation, it is advisable to use grout (thin mortar) to take care of any unevenness in the concrete as well as to provide a solid foundation at all points.

Leveling Bolts and Pads

The machine is supplied with leveling bolts and pads. Thread the bolts through the tapped holes in the base and position on the machine on the pads. Refer to Figure 1.6. Level the machine as outlined on the next page.

Machine Hold-Down Bolts

When setting machine on a floor than has any surface irregularities, shims should be used to correct this condition to the greatest extent possible.

If securing machine to floor with hold-down bolts, make certain that all four corners are making contact with the floor after machine is leveled. If above condition is not met, it is possible to twist the column and put a bind into ways.

The machine should be placed on a solid level floor with shims or anti-vibration pads as shown in Figure 1.7 to insure machine base is positioned evenly.

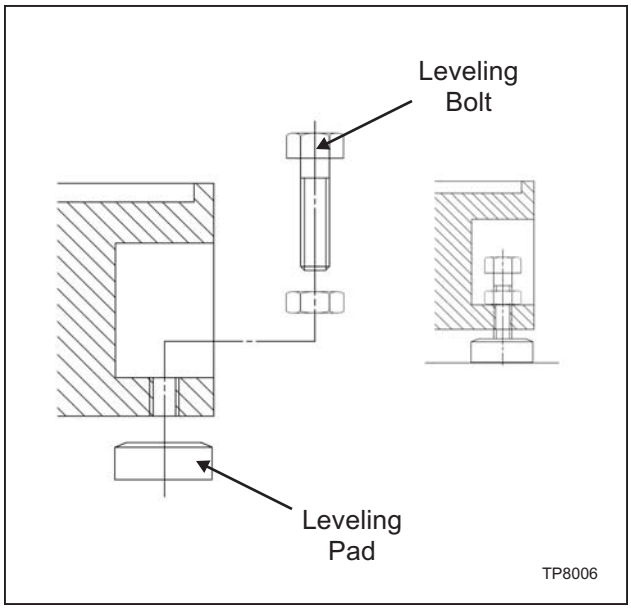

Figure 1.6 - Leveling Bolts and Pads

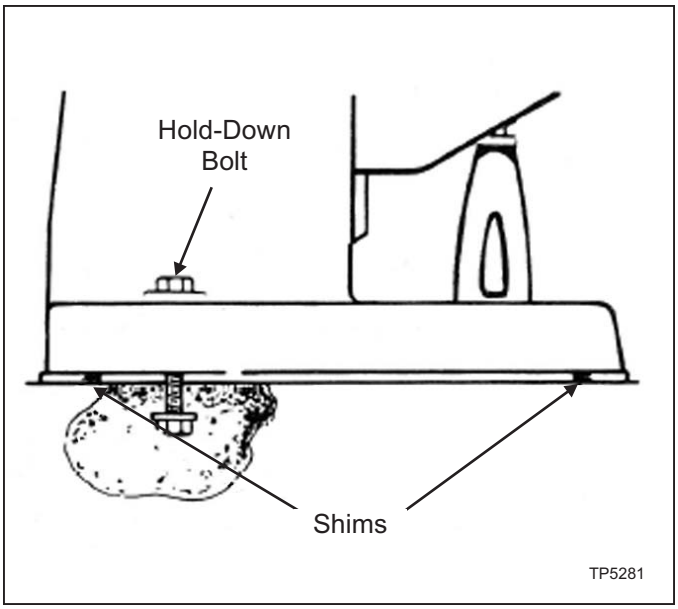

Figure 1.7 - Hold-Down Bolts

LEVELING THE MACHINE

Set machine by leveling the work table lengthwise and crosswise with a precision instrument as shown in Figure 1.8.

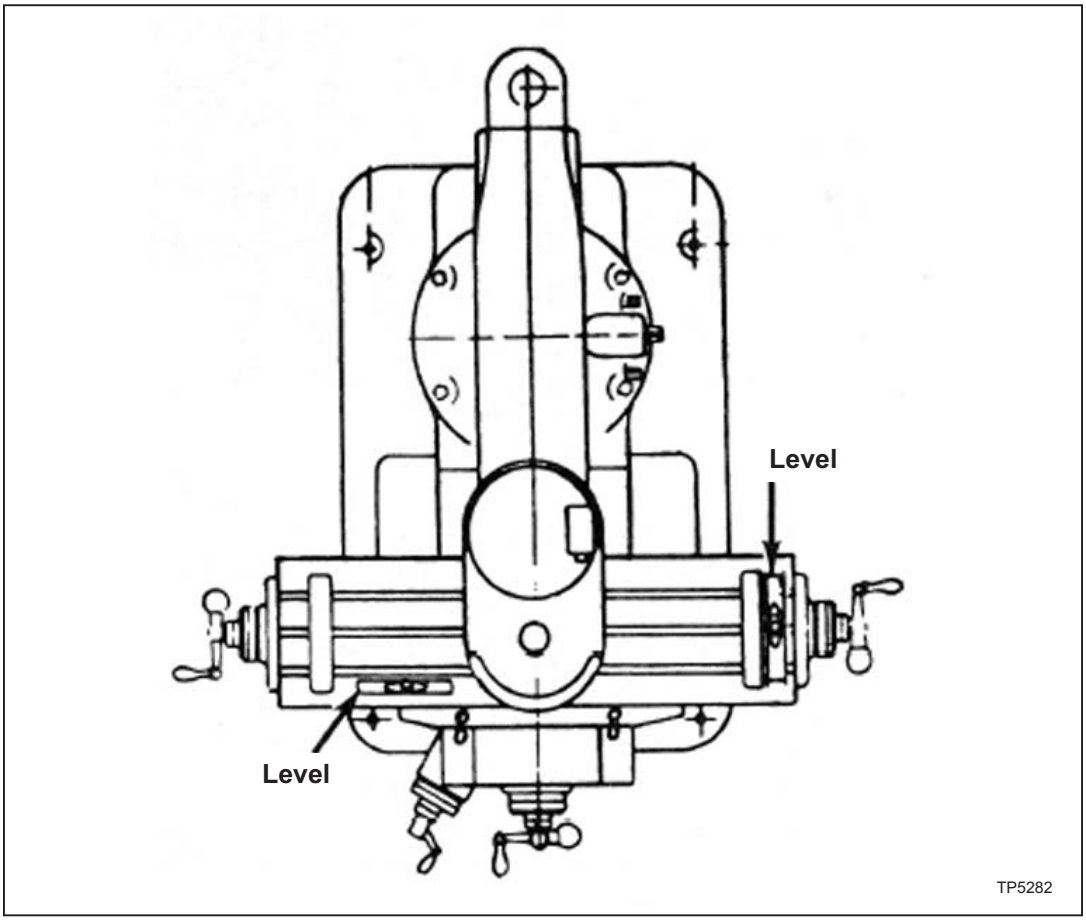

Figure 1.8 - Leveling the Machine

REMOVE THE VARIDISC SHIPPING SCREWS (Machines Before Serial Number HDNG7009M Only)

NOTICE

The varidisc shipping screws must be removed before operating the machine.

1. Loosen screw "D", Figure 1.9.
2. Remove tag "E".
3. Pivot motor pulley cover "F", Figure 1.10, to gain access to the varidisc assembly.
4. Remove two screws "G" from the varidisc assembly.
5. Pivot the motor pulley cover back into position.
6. Use screw "D" and the two screws removed from the varidisc assembly to secure the motor pulley cover. Refer to Figure 1.11.

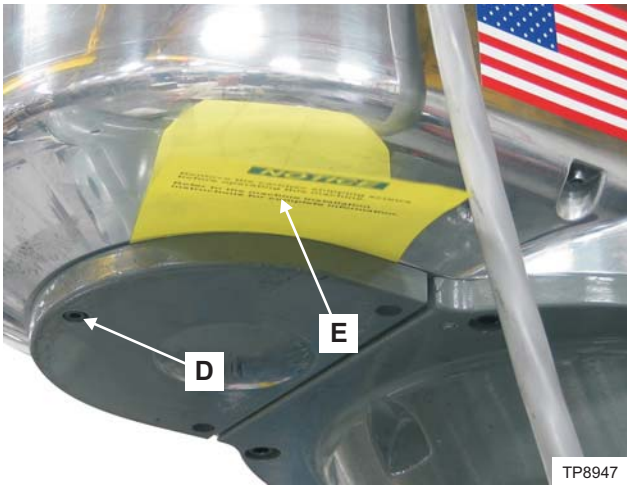

Figure 1.9 - Motor Pulley Cover with One Screw

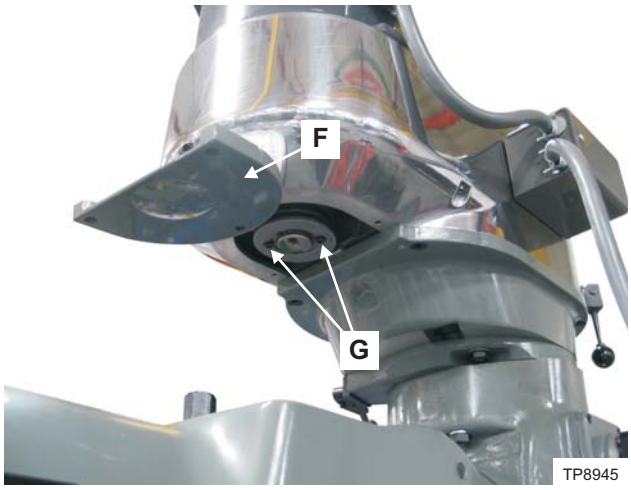

Figure 1.10 - Varidisc Shipping Screws

Figure 1.11 - Motor Pulley Cover with Three Screw

MACHINE POWER SUPPLY

WARNING

Machine must be connected by a qualified electrician.

CONNECTING THE POWER SUPPLY

To connect the machine to the plant supply, have a qualified electrician proceed as follows:

1. Check required voltage against power supply to ensure that they are compatible.
2. Connect machine wiring to power supply making sure connection is in compliance with safety regulations.
3. Check for correct spindle rotation. In the HIGH SPEED range, the spindle should rotate clockwise when viewed from the top of the machine.

- NOTE -

Drum switch and Hi-Neutral-Lo lever must be in Hi range when checking spindle rotation.

LUBRICATION

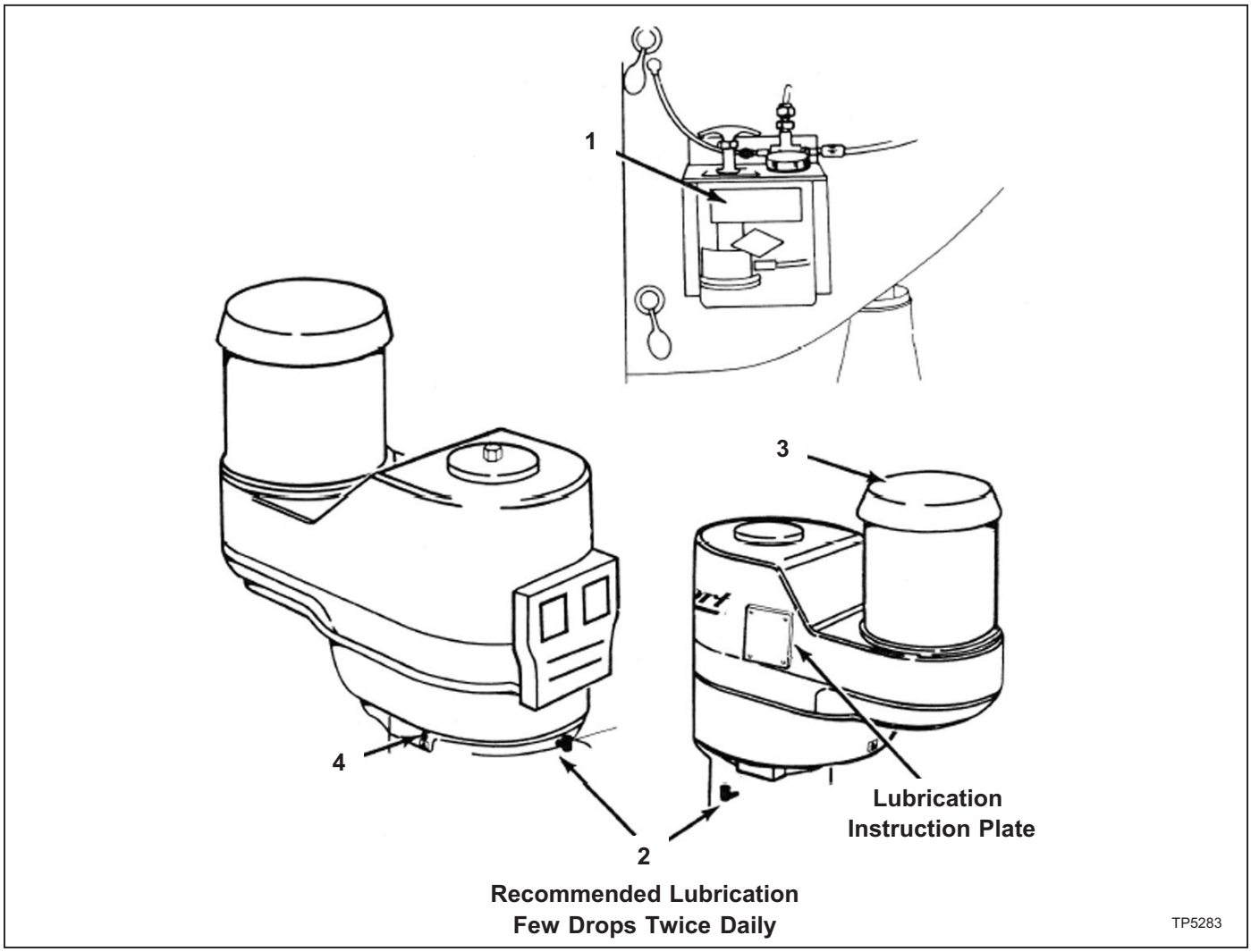

Figure 1.12 - Lubrication Requirements

Indicator	Lubrication Area	Type of Lubrication
1	Way Surfaces and Lead Screws	Sunoco Waylube #1180 or equivalent
2	Milling Heads (Spindle Bearings)	S.A.E. 10 or 10W Light Oil (None on grease-packed heads)
3	Motor	None required. Motor greased for life of bearings
4		Lubricate with grease every six months as described on lubrication plate
Not Shown	Power Feed	Oil to sight level with Mobilube No. 46 S.A.E. 140
Not Shown	Shaping Attachment	Mobil 600W Oil or equivalent

ALIGNMENT OF THE HEAD FOR FINE WORK

For precision boring or work of that nature, where it is necessary to have the head perfectly square with the table, use method described below. To set head perfectly square with table, adjust ram adapter through vertical adjusting worm shaft with ram adapter on ram. Loosen four locknuts but leave drag on same for fine adjustment. To square head to table in the longitudinal axis, mount indicator as shown in Figure 1.13. For general milling use, graduations provided on the head are close enough.

Tighten the four head locknuts in a diagonal order as previously described on page 1-2. Tighten the three ram locking bolts to 50 lb-ft.

NOTICE

Do not operate the machine until properly lubricated.

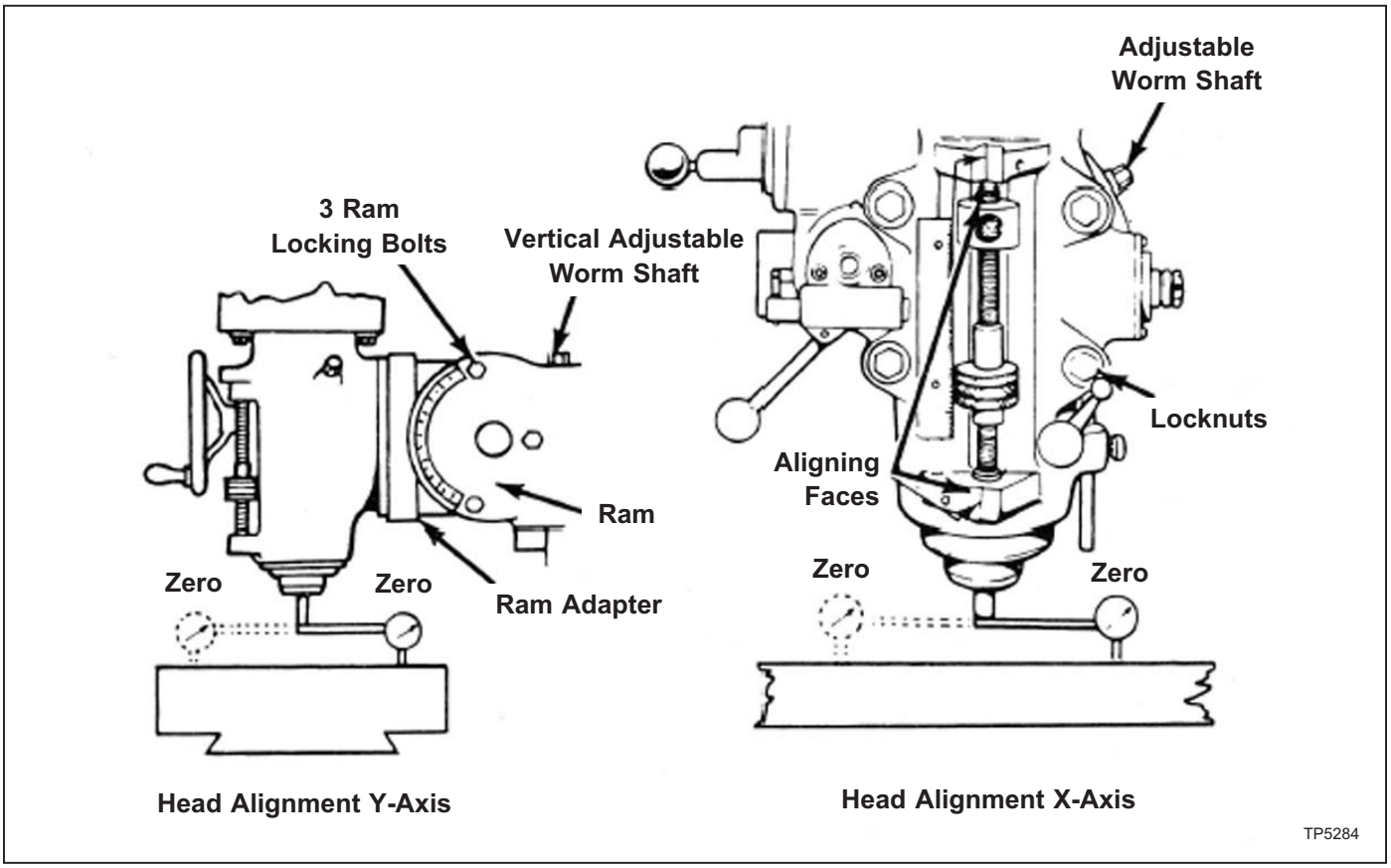

Figure 1.13 - Head Alignment for Y and X Axis

- NOTES -

- NOTES -

CHAPTER 2 - OPERATION

HEAD CONTROLS

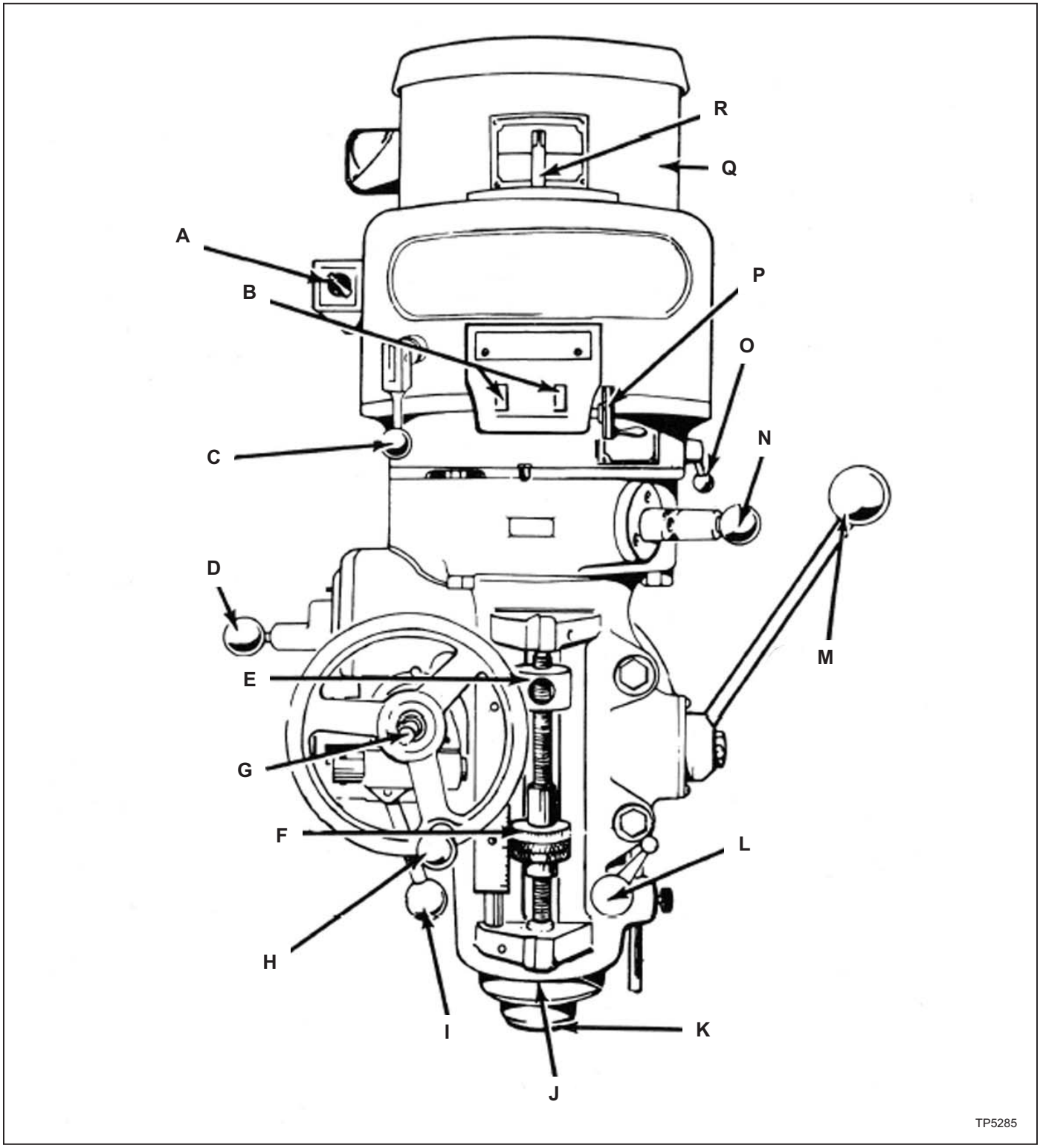

Figure 2.1 - Head Controls Parts Assembly

HIGH-LOW RANGE SWITCH

High-Low Range Switch “A”, Figure 2.2, is a motor reversing switch. When the attachment is in direct drive (HIGH SPEED), the motor and spindle are turning in a clockwise direction as viewed from the top of machine. When the attachment is in “Back Gear” (LOW SPEED), the spindle will run backwards (counter-clockwise) unless the motor direction is reversed by moving switch to “Low”.

The back gear lever is marked Hi-Lo. This will indicate the proper switch position. They should be positioned alike or the spindle will run backwards.

- NOTE -

Spindle should run in clockwise position.

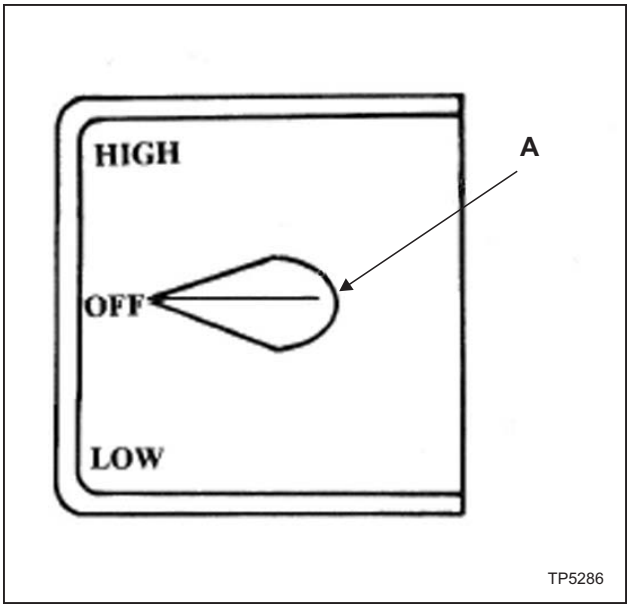

Figure 2.2 - High-Low Range Switch

VARIABLE SPEED DIAL

Variable Speed Dial “B”, Figure 2.3, visibly indicates, in windows, the speed range that the machine is operating in, 60 to 500 low range, 500 to 4200 high range.

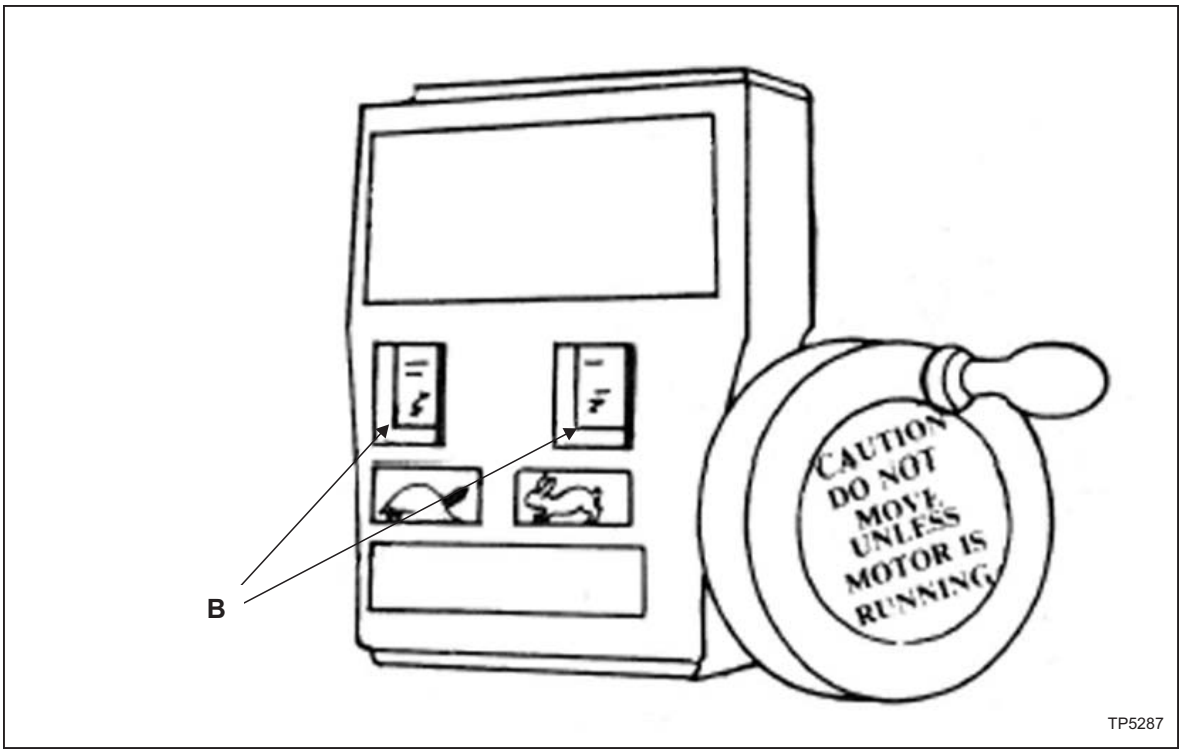

Figure 2.3 - Variable Speed Dial

SPINDLE BRAKE

Spindle Brake “C”, Figure 2.4, can be moved in either direction to stop spindle; however, when locking spindle, brake lever should be moved either by pulling towards the operator or pushing away from the operator, then raised. When brake is worn out it has to be replaced. There are no adjustments to be made.

NOTICE

BE certain that spindle brake is released before starting the motor. This is important as the motor can be damaged if switch is turned ON with brake in locked position.

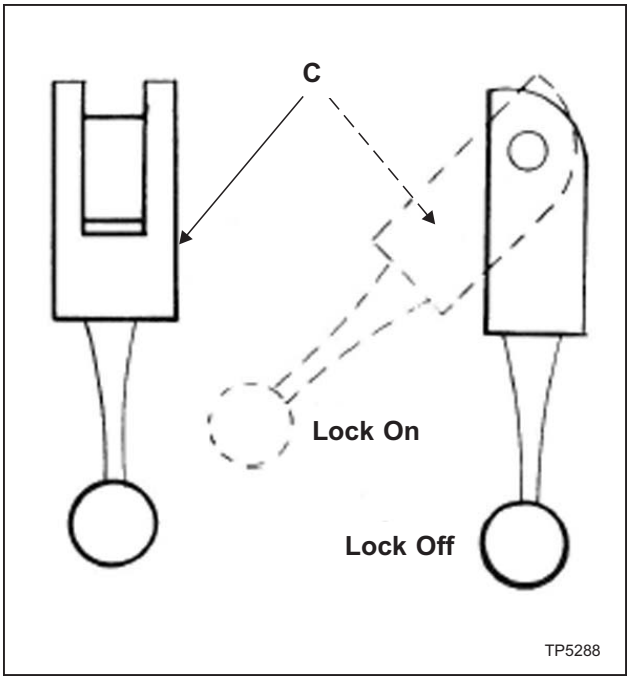

Figure 2.4 - Spindle Brake

QUILL FEED SELECTOR

The Quill Feed Selector “D”, Figure 2.5, is used for selecting the three feeds: .0015”, .003” and .006” per revolution. It is shifted by pulling knob out and turning from one position to the other. Feeds are stamped on cover below indentation hole. Feed is more readily engaged when spindle is running.

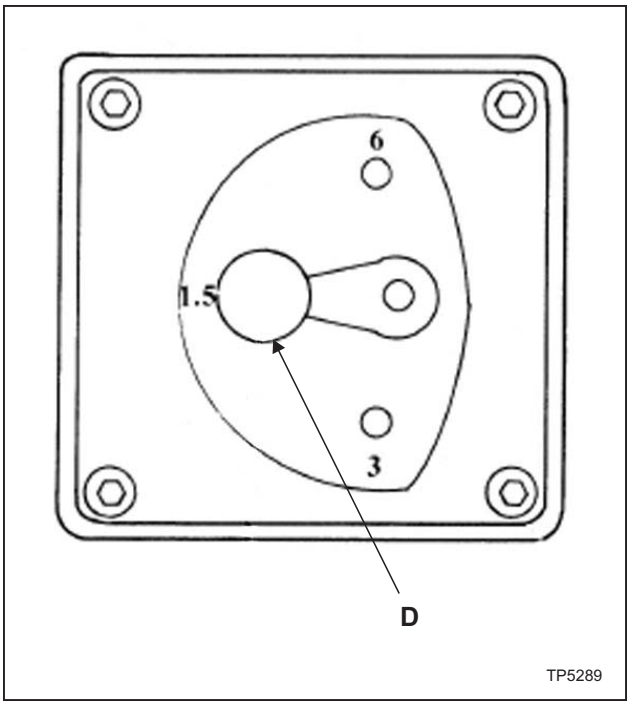

Figure 2.5 - Quill Feed Selector

QUILL STOP KNOB

Quill Stop Knob “E”, Figure 2.6, is used to disengage automatic feed in either direction as well as the stop point setting working depths.

MICROMETER NUT

Micrometer Nut “F”, Figure 2.6, is used for setting depths. Each graduation on nut indicates .001” of depth, it reads directly to scale mounted along the side of it. Depths may be obtained by setting micrometer nut in conjunction with quill stop.

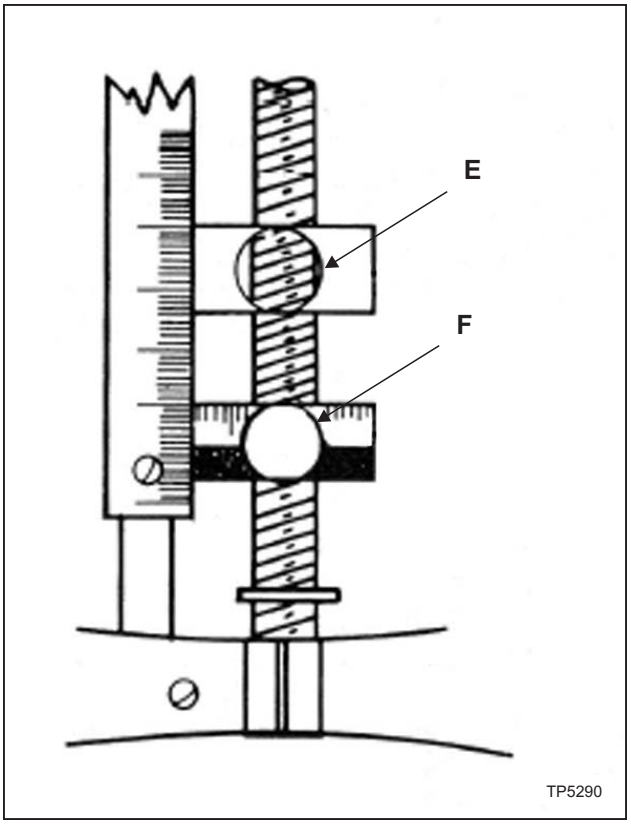

Figure 2.6 - Quill Stop Knob and Micrometer Nut

FEED REVERSE KNOB

The position of the Feed Reverse Knob “G”, Figure 2.7, depends upon direction of spindle rotation. If boring with right hand cutting tools, pull feed handle towards operator until clutch becomes engaged.

Neutral position is between forward and reverse position. It is recommended that the handle be left in neutral position when not in use.

MANUAL FEED HANDWHEEL

Feed Reverse Knob “G” should be in neutral position and Feed Control Lever “I”, Figure 2.8 engaged. Clockwise rotation of Manual Feed Handwheel “H”, Figure 2.7, moves quill down. The manual feed handwheel and the quill feed handle may be disengaged by moving them outward about .125”.

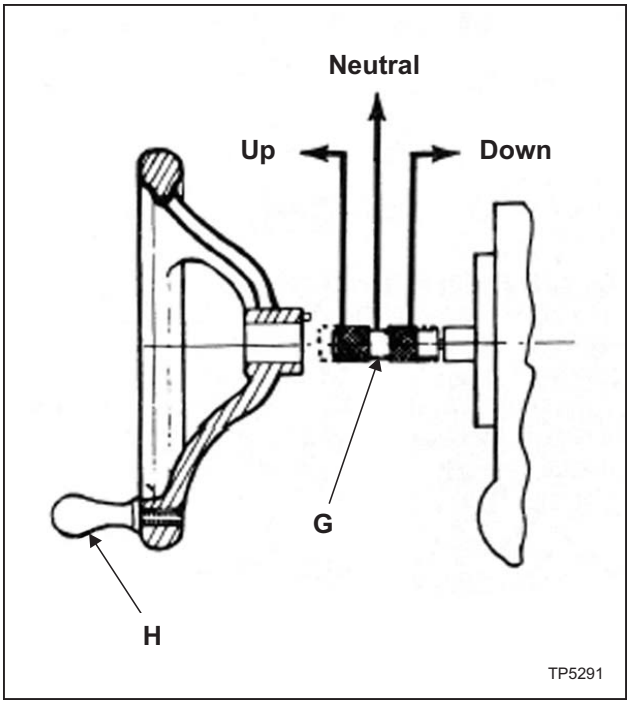

Figure 2.7 - Feed Reverse Knob and Manual Feed Handwheel

FEED CONTROL LEVER

Feed Control Lever “I”, Figure 2.8, engages overload clutch on pinion shaft when positioned left and will stay engaged until either quill stop comes in contact with micrometer adjusting nut, forcing feed control lever to drop out automatically, or release manually by engaging lever to right.

FEED CONTROL OVERLOAD CLUTCH

The Feed Control Overload Clutch is set at the factory to hold up to 200 lbs of down pressure on quill, which will accommodate drills up to .375” diameter in mild tool steel.

NOTICE

This clutch should not be tampered with in the field.

- NOTE -

The feed control lever must be engaged in order to use manual feed controls. the quill feed handle and manual feed handwheel may be removed when not in use.

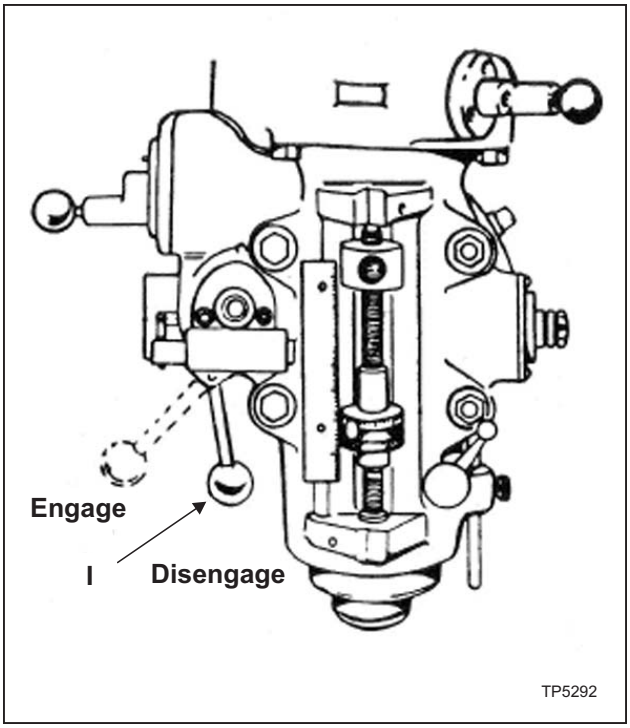

Figure 2.8 - Feed Control Lever and Feed Control Overload Clutch

QUILL

Quill “J”, Figure 2.9, contains the spindle assembly and can be raised or lowered by using the quill feed handle “M”, Figure 2.10.

SPINDLE

Spindle “K”, Figure 2.9, performs the actual rotation and also retains the machine tooling.

QUILL LOCK

Quill Lock “L”, Figure 2.9, is a friction lock for use when quill is in a stationary position such as a milling operation. It is recommended that this lock be used whenever quill movement is not desired.

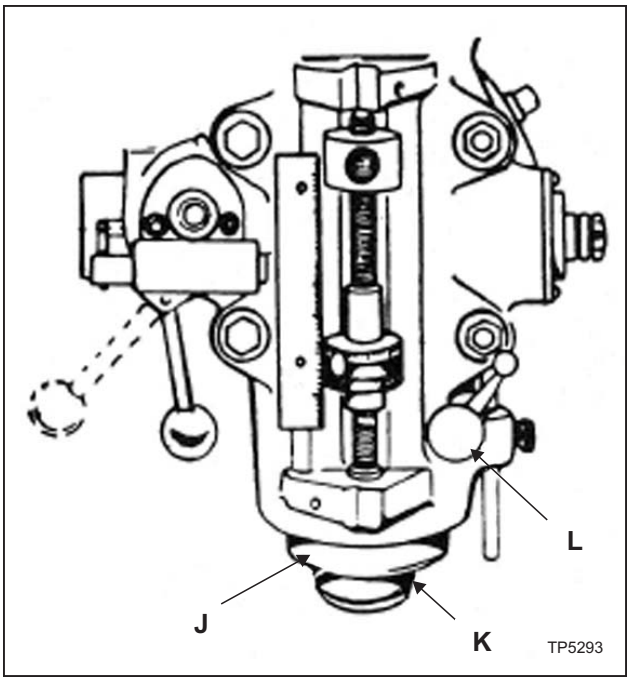

Figure 2.9 - Quill, Spindle and Quill Lock

QUILL FEED HANDLE

Quill Feed Handle “M”, Figure 2.10, is used to raise and lower the quill manually. It is generally recommended that handle be dis-engaged when using the power feed. It may be removed by simply pulling handle off.

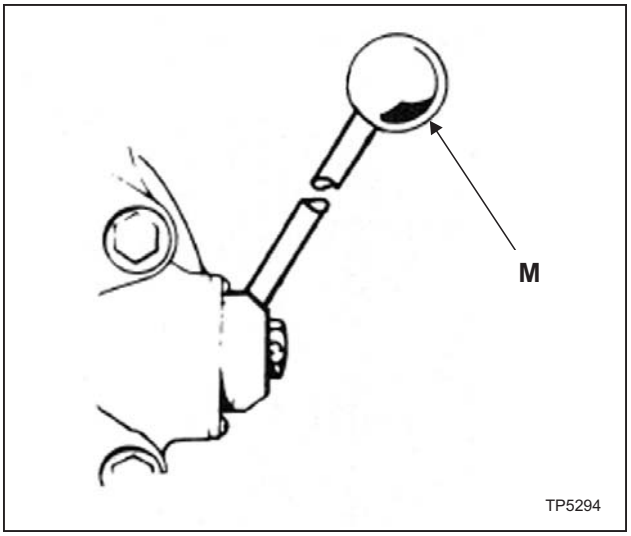

Figure 2.10 - Quill Feed Handle

POWER FEED TRANSMISSION ENGAGEMENT CRANK

Power Feed Transmission Engagement Crank “N”, Figure 2.11, engages power feed worm gear. When lever is in right hand hole, the power feed worm gear is engaged.

To engage worm gear, pull knob out and crank handle in clockwise or down direction and move to opposite position (see Figure 2.12).

NOTICE

Power feed worm gear may be engaged when spindle is rotating, however, it should be engaged gently to avoid damage to worm gear. The worm gear may be disengaged at any time. do not use power feed at speeds above 3000 RPM.

- NOTE -

Crank should be rotated counter-clockwise to engage power quill feed. Crank should be rotated clockwise to disengage.

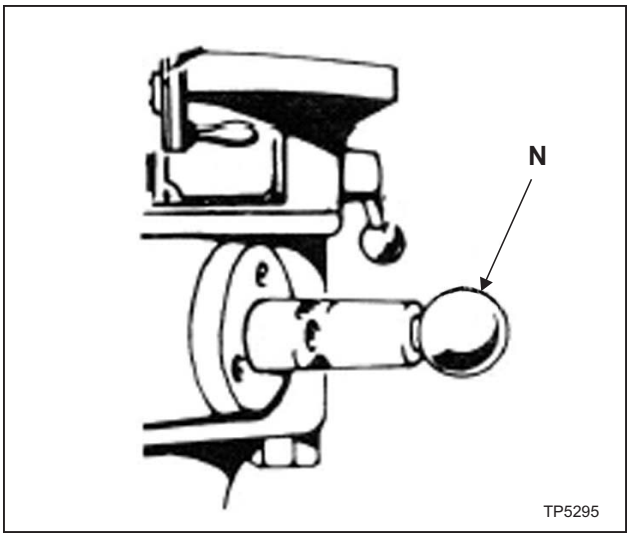

Figure 2.11 - Power Feed Transmission Engagement Crank

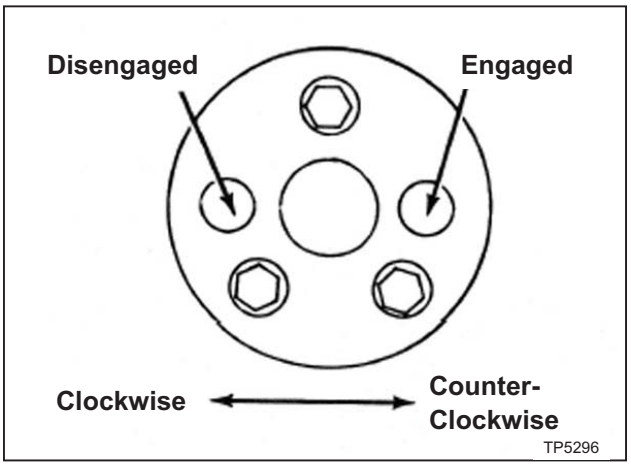

Figure 2.12 - Worm Gear Disengagement

HI-NEUTRAL-LO LEVER

NOTICE

Do not shift hi-lo lever while motor is running.

The Hi-Neutral-Lo Lever “O”, Figure 2.13, is used to put the attachment into either back gear or direct drive. Rotate the spindle by hand to facilitate meshing of clutch or gears.

Neutral is provided to permit free spindle rotation for indicating and setup work.

In the high speed position (direct drive) the spindle is driven by tapered clutch teeth. If the clutch is not meshed tightly, clutch rattle will be heard. This can be corrected by loosening the two securing screws in lever while in high speed position. The clutch spring will automatically adjust the clutch. Tighten the two securing crews in lever.

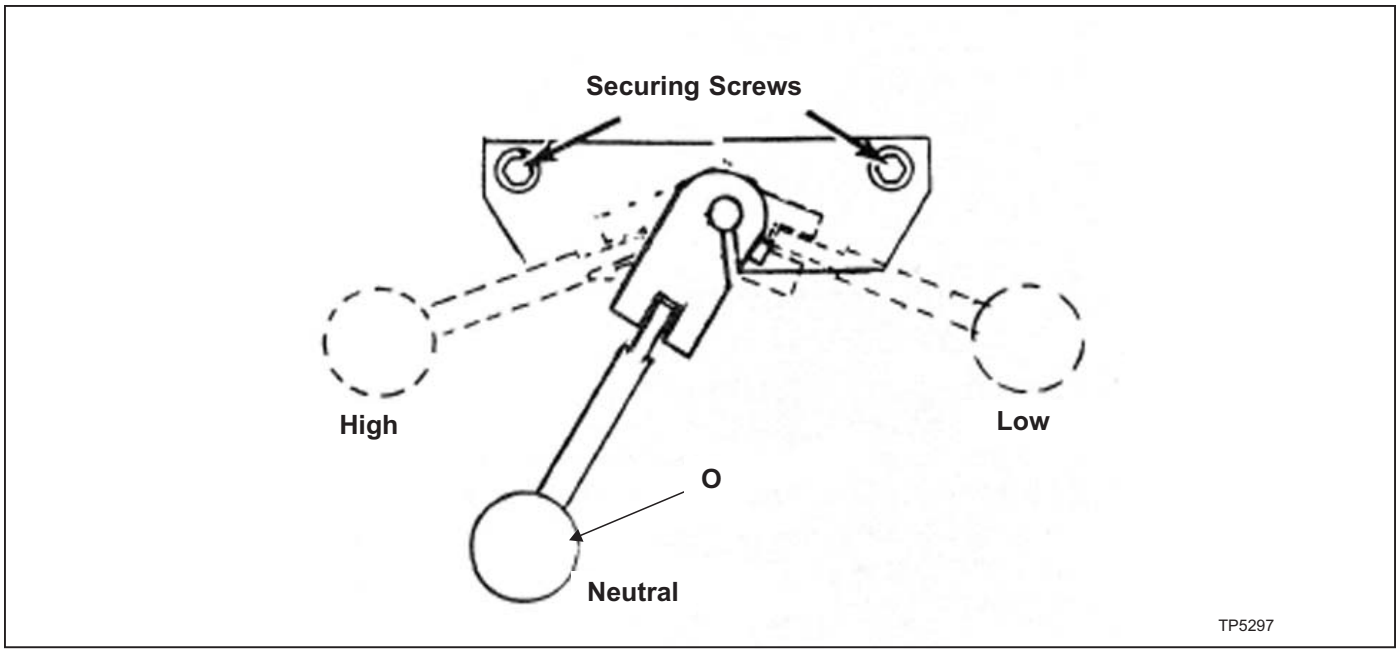

Figure 2.13 - Hi-Neutral-Lo Lever

SPEED CHANGE HANDWHEEL

NOTICE

DO NOT attempt to change spindle RPM unless the motor is running. Dial speeds will only be approximate. Belt wear will cause a slight variation in speeds from what is indicated on the dial.

Spindle speeds are adjusted by turning Speed Change Handwheel “P”, Figure 2.14, on the front of the belt housing. There are two ranges: 60 to 500 and 500 to 4200.

To obtain 60 to 500 (low range):

1. Hold the Hi-Neutral-Lo lever (right rear side of the attachment) so the gears are clear of one another.
2. Rotate the spindle nose by hand until the gears line up, then move the Hi-Neutral-Lo lever to the “Lo” position (back gear).
3. Use the low range on the drum switch to engage the back gears.

NOTICE

If the back gears do not mesh, do not force the lever.

To obtain 500 to 4200 (high range):

1. Hold the Hi-Neutral-Lo lever (right rear side of the attachment) so the gears are clear of one another.
2. Rotate the spindle nose by hand until the gears line up, then move the Hi-Neutral-Lo lever to the “Hi” position.
3. Set the drum switch to high range.

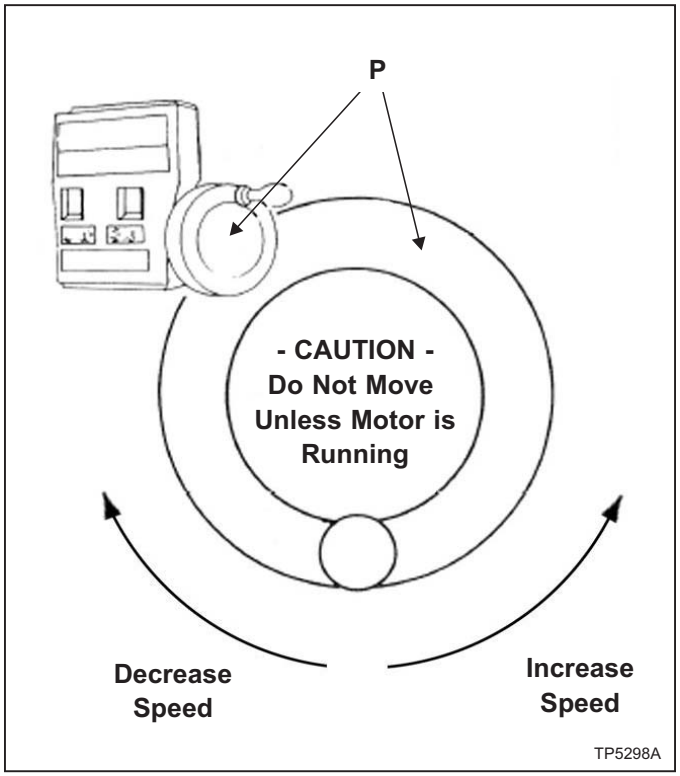

Figure 2.14 - Speed Change Handwheel

NOTICE

Try to avoid shifting the hi-lo lever when the feed worm is engaged.

DRAWBAR

When tightening or loosening the Drawbar “R”, Figure 2.15, it is necessary to lock the spindle. To accomplish this, use the spindle brake which is located on the left side of the belt housing, pulling towards the operator or pushing away from the operator until it binds, then raise the quill feed handle.

Drawbar has 7/16”-20 right hand thread and should be tightened by hand with normal amount of pressure using wrench furnished with machine. To loosen collet, back off drawbar and if collet does not open immediately, give knob on top of drawbar a slight tap. Spindle has non-sticking taper and collet should release readily.

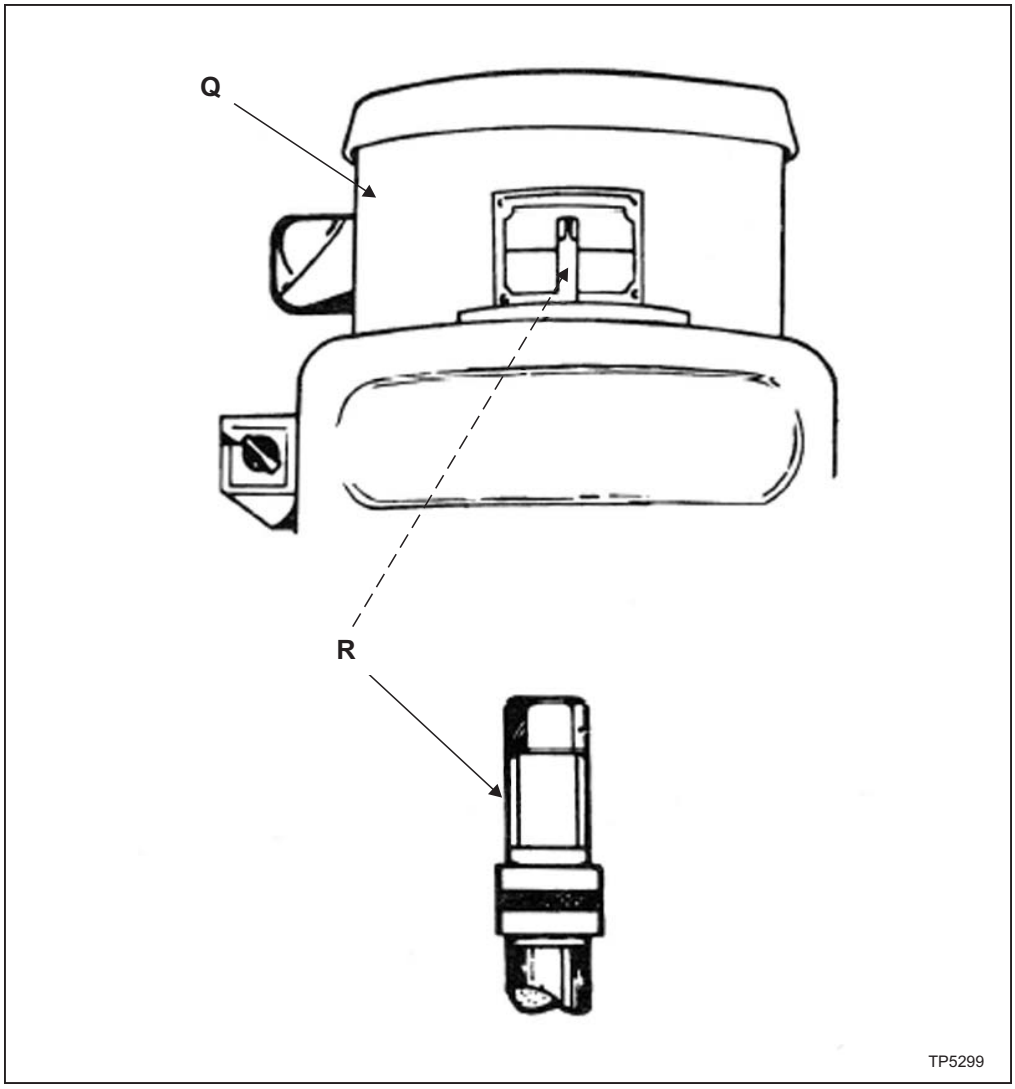

Figure 2.15 - Motor and Drawbar

Spindle Speed

NOTICE

DO NOT change speed when spindle is stationary. Change speed only when spindle is running.

To change speed within range:

1. Start spindle.
2. Turn handwheel “A”, Figure 2.16, to select required speed.

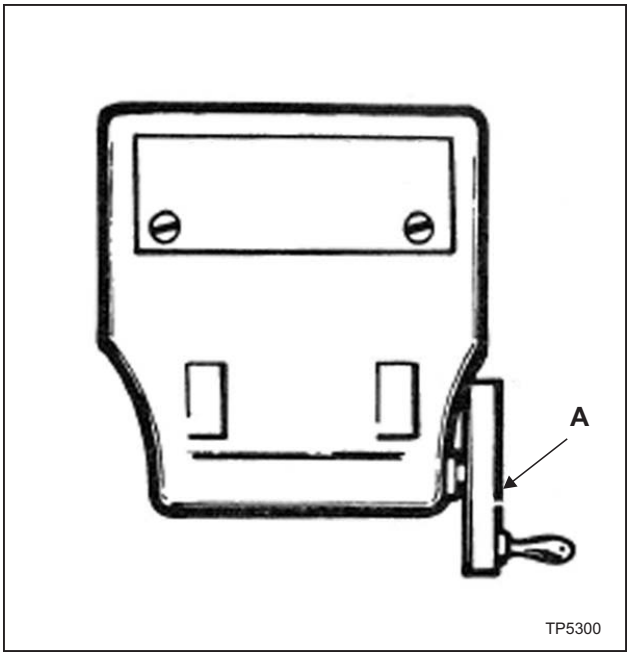

Figure 2.16 - Spindle Speed Change

Back Gear (Low Speed)

NOTICE

DO NOT change range while spindle is running. Change range only when spindle is stationary.

To change range from direct to back gear drive:

1. Switch “B”, Figure 2.17, to OFF (Stop spindle rotation).
2. Move lever “C” through neutral to LOW (This reverses the spindle rotation).
3. Switch “B” to LOW.

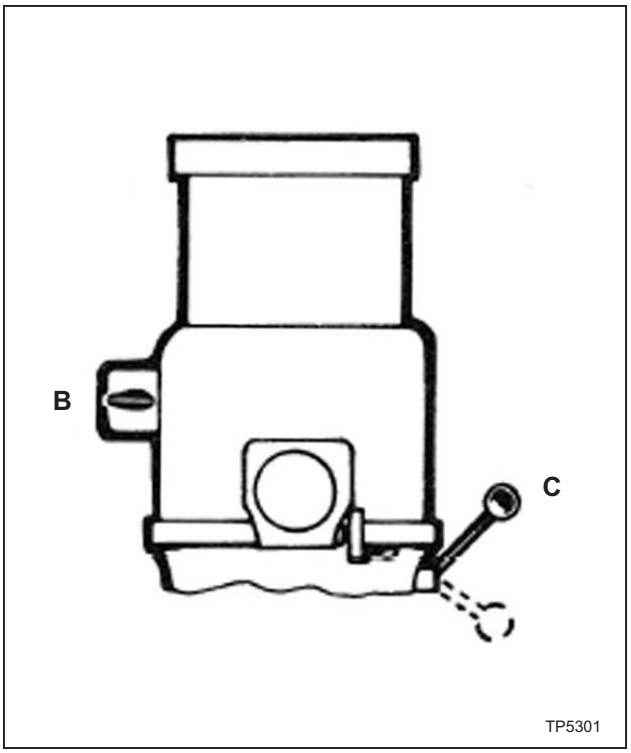

Figure 2.17 - Back Gear Range Change

Direct Drive (High Speed)

To change range from back gear to direct drive:

1. Switch “B” to OFF (Stop spindle rotation).
2. Move lever “C”, Figure 2.18, through neutral to HIGH.
3. Rotate spindle by hand until the clutches are felt to engage.
4. Switch “B” to HIGH.

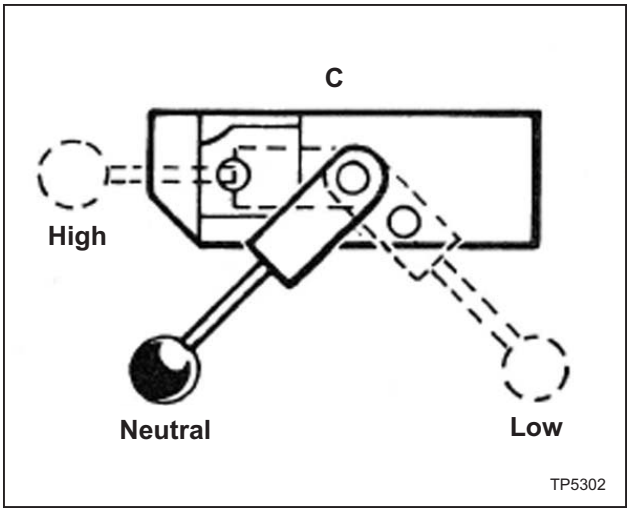

Figure 2.18 - Direct Drive Lever

Quill Feed

FINE HAND FEED

1. Disengage Auto Quill Feed “D”, Figure 2.19.
2. Locate “F” in mid (neutral) position.
3. The quill is now under handwheel control

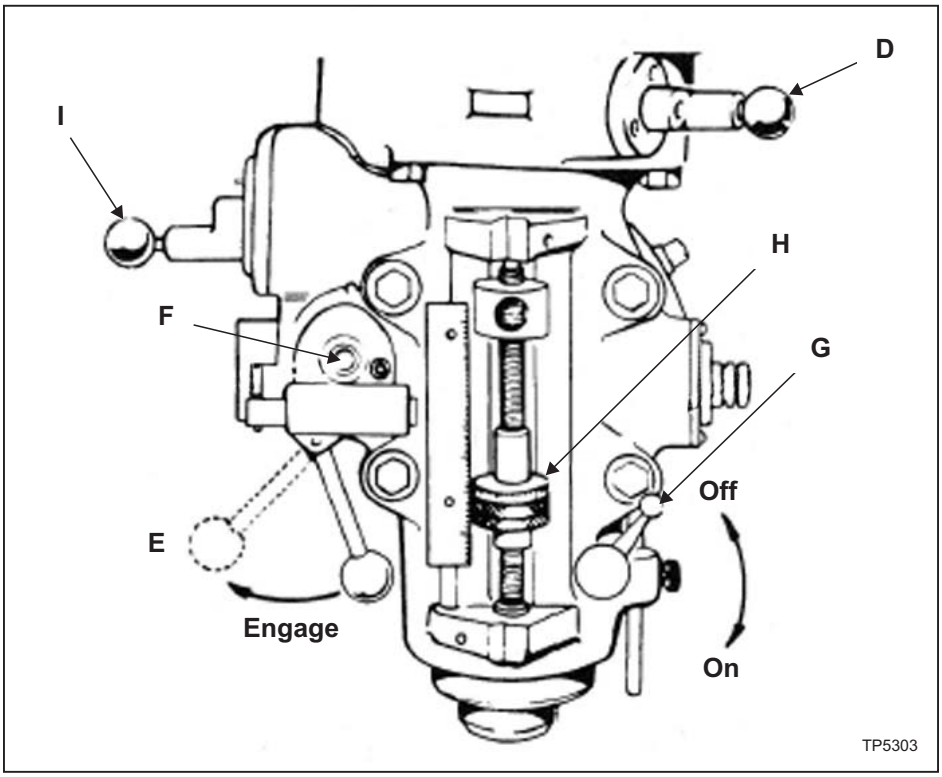

Figure 2.19 - Quill Feed
Fine Hand Feed Control

- NOTE -

Maximum loading .375” (9.5mm) diameter drill steel.

1. Ensure quill lock “G”, is off.
2. Set micrometer dial “H” to required depth.
3. Engage auto quill feed “D” when motor has stopped
4. Select feed rate “I”.
5. Select feed direction “F”, Figure 2.22.
6. Engage feed trip lever “E”. The feed will automatically trip out at a depth within .010” (.25mm)
7. Hand feed to dead stop for repeating accuracy .001” (.025mm)

NOTICE

Do not engage quill feed “D” over 3000 RPM.

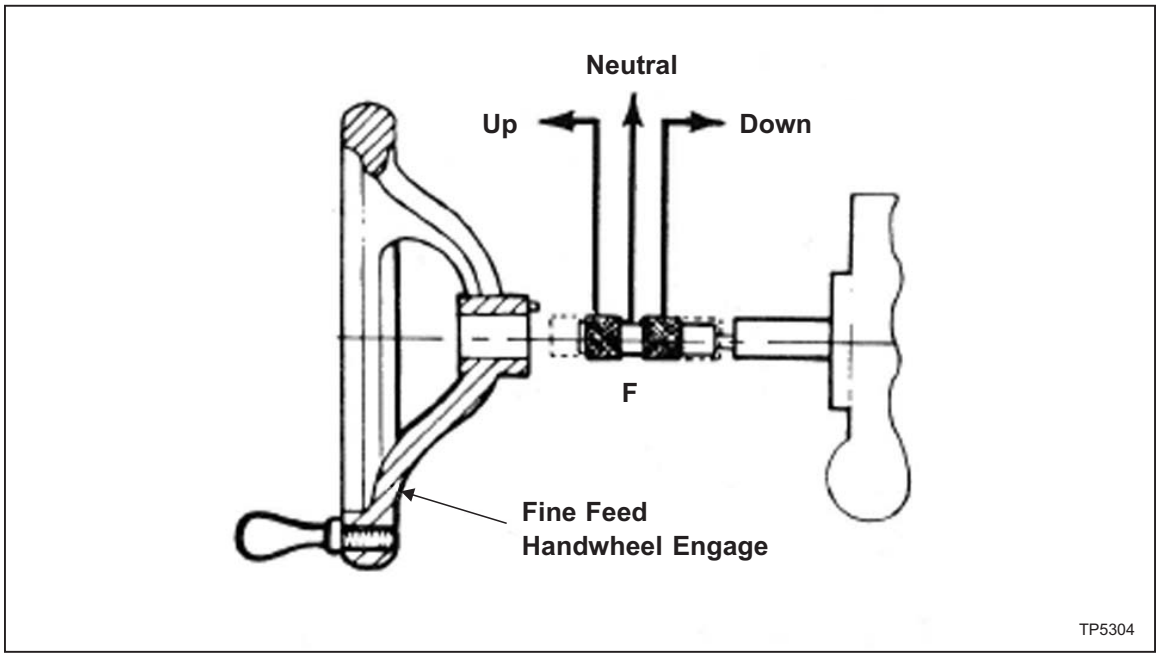

Figure 2.20 - Quill Feed
Automatic Feed Control

Spindle Brake

Brake lever has capability to rotate in either direction to brake and lock.

CAM upwards to lock and prevent movement of spindle (see Figure 2.21).

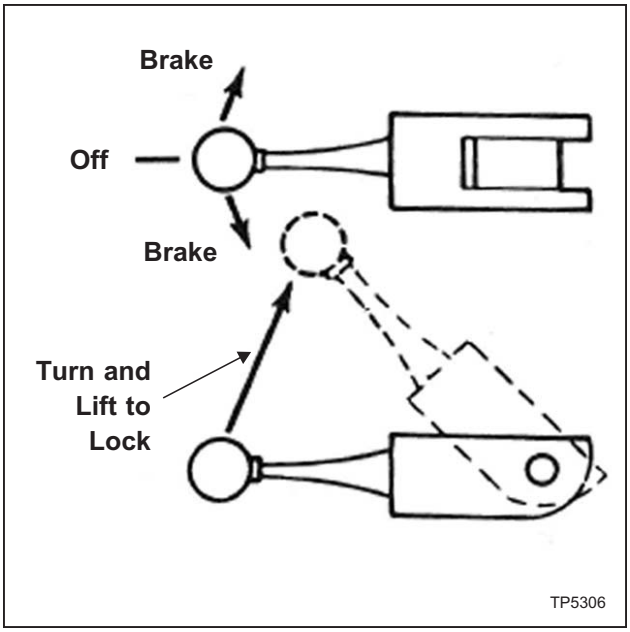

Figure 2.21 - Spindle Brake

Quill Sensitive Hand Feed

1. Place the handle on the quill feed shaft.
2. Select the most suitable position.
3. Push home until the locating pin engages.

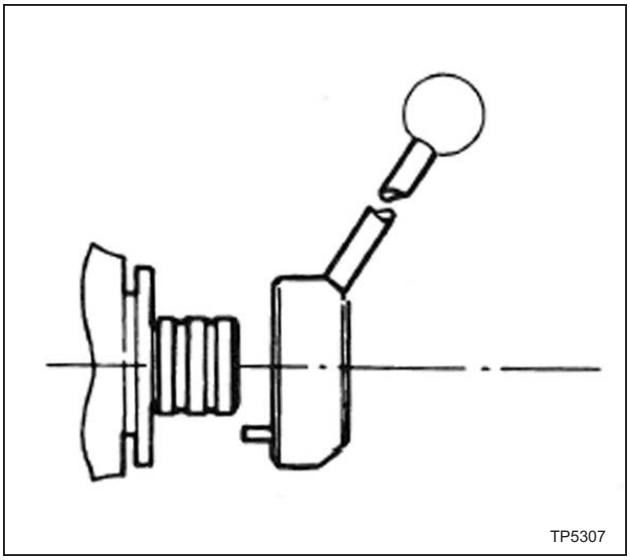

Figure 2.22 - Quill Sensitive Hand Feed

SWIVEL THE BELT HOUSING

NOTICE

Incorrect spline alignment can be caused by unequal tightening of the locknuts 'J' causing fluctuation of the quill feed which can be felt through the sensitive feed handle. It is advised to call Hardinge service department before attempting this procedure.

1. Loosen three locknuts "J", Figure 2.23.

NOTICE

DO NOT remove these locking nuts.

2. Swivel to required angular setting.
3. Tighten three locknuts "J" snugly before final tightening of locknuts. Run spindle to give correct spline alignment, then tighten locknuts securely.

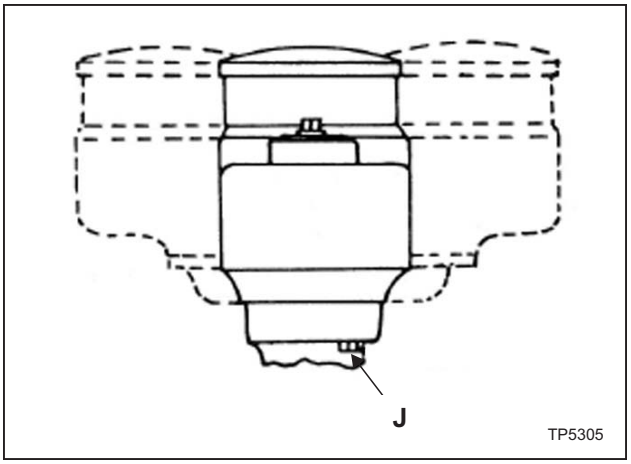

Figure 2.23 - Swivel Belt Housing

SWIVEL THE TURRET

1. Use wrench supplied with machine to loosen the four bolts "K", Figure 2.24.

NOTICE

DO NOT remove these four bolts.

2. Index to the required setting.
3. Lock the four bolts "K" to 47 lb-ft.

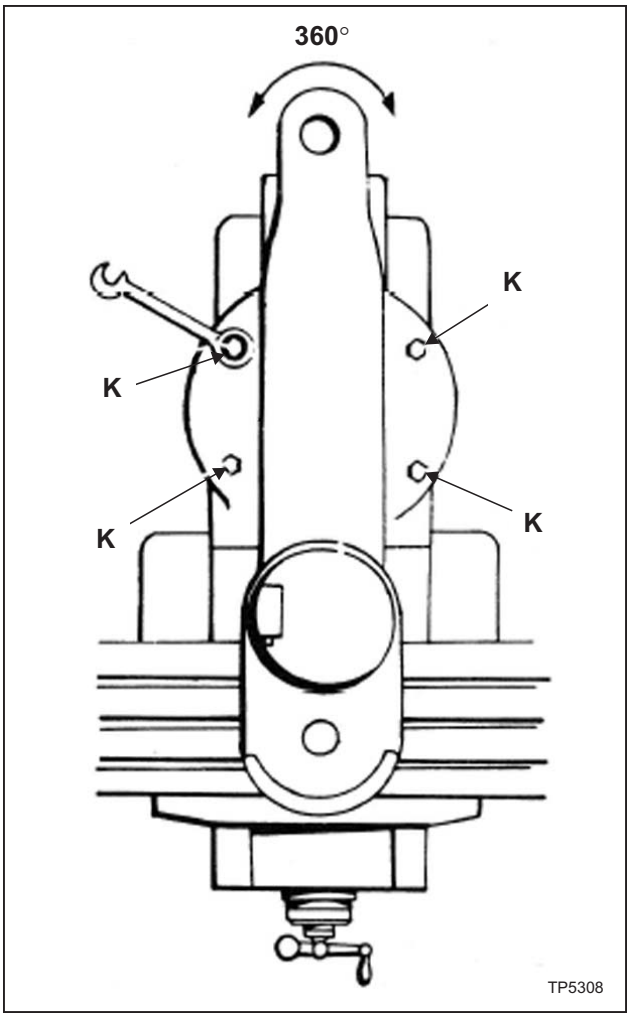

Figure 2.24 - Swivel Turret

MOVE THE RAM SLIDE

1. Use wrench provided with machine to loosen bolts “L” and “M”, Figure 2.25.
2. Use wrench to move the slide to the desired position using bolt “N”.
3. Tighten bolts “L” and “M”, starting with the rear bolt.

- NOTE -

It is recommended that on heavy milling work, head should be kept as close to column as possible, where maximum rigidity is obtained.

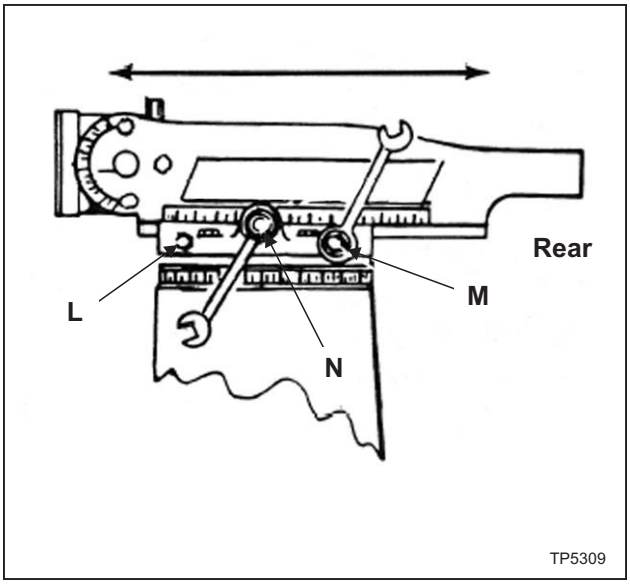

Figure 2.25 - Ram Slide

SADDLE CLAMPING

When milling with longitudinal table feed only, it is advisable to clamp the knee to the column (see Figure 2.28) and the saddle to the knee to add rigidity to these members and provide for heavier cuts with a minimum of vibration. The saddle locking lever is located on the left hand side of the saddle.

Excessive moisture can cause slight table bind. Use moderate clamping pressure, as this will hold saddle sufficiently.

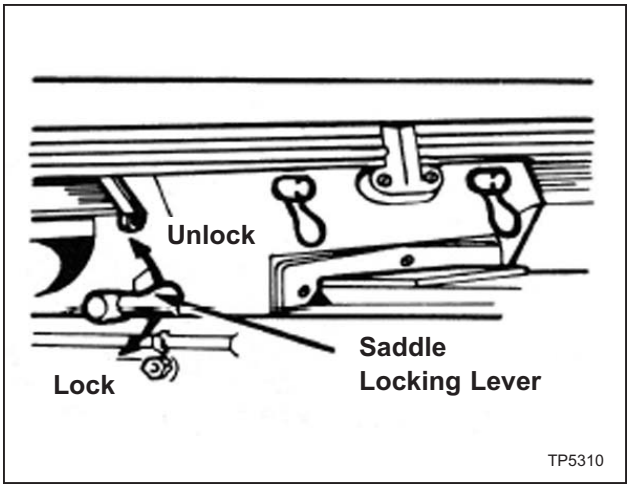

Figure 2.26 - Saddle Clamping

TABLE CLAMPING

The table clamp levers are located on front of saddle and should always be clamped when longitudinal movement is not required (see Figure 2.27).

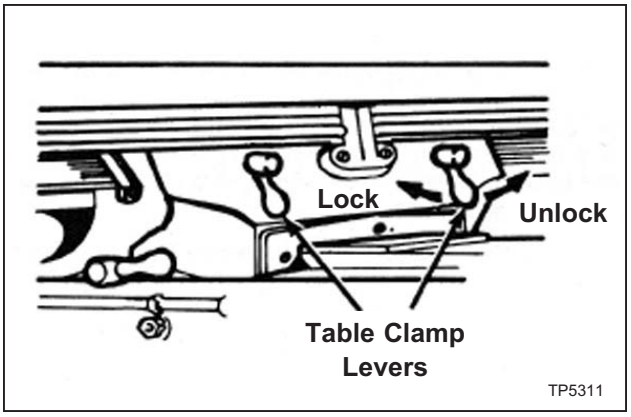

Figure 2.27 - Table Clamping

KNEE CLAMPING

The knee clamping levers are at the left side of the knee. Leave clamped at all times unless using knee in operation (see Figure 2.28).

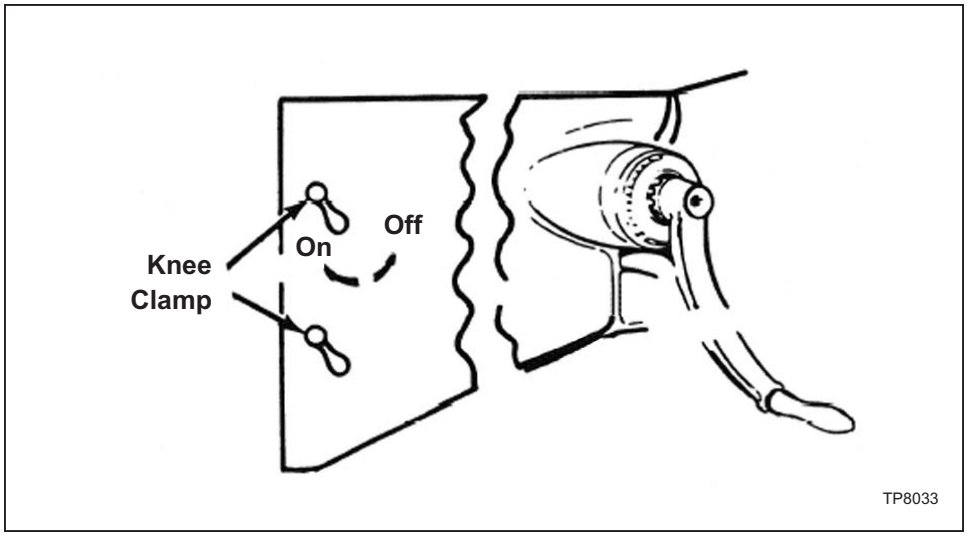

Figure 2.28 - Knee Clamping

- NOTES -

- NOTES -

CHAPTER 3 - MAINTENANCE

2J-HEAD

MOTOR REMOVAL

1. Run head to adjust to lowest speed.
2. Disconnect power.
3. Remove three screws “A” and cover “B”, Figure 3.1.
4. Using the two screws “A”, compress spring “C”.
5. Rotate the speed changer to the highest speed.
6. Remove the reversing switch from the belt housing.
7. Remove the two securing screws “D”.
8. Lift the motor and rest the case on stud “E”, Figure 3.2.
9. Ease the belt over the lower drive disc and remove the motor.

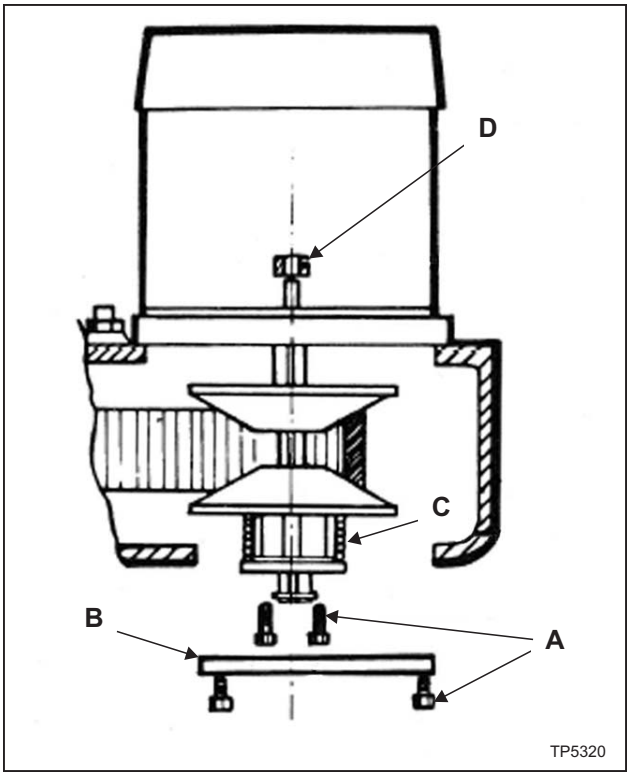

Figure 3.1 - Motor Removal
Front View

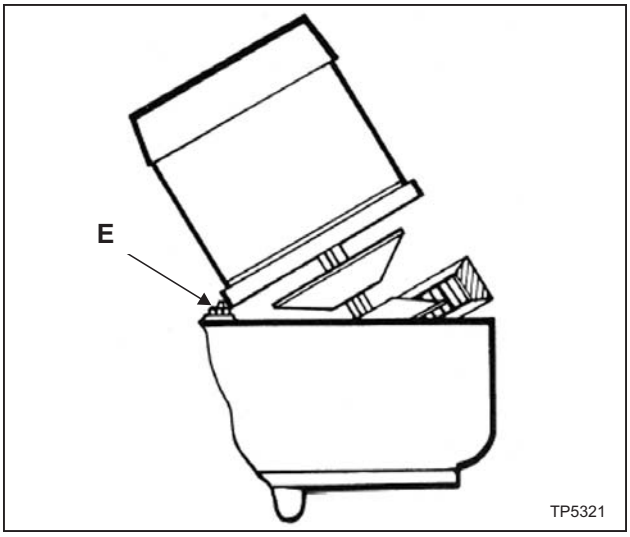

Figure 3.2 - Motor Removal
Side View

DRIVE BELT REPLACEMENT

1. Remove the motor as described on page 3-1.
2. Remove the three screws “F”, Figure 3.3, insert into the adjacent tapped holes and withdraw bearing housing “G”.
3. Remove the two screws and the bushings “H”.
4. Remove four screws “I” and one screw “J”.
5. Remove four screws securing speed changer “K”.
6. Remove top housing “L”. Tap to clear the dowels.
7. Replace the belt.

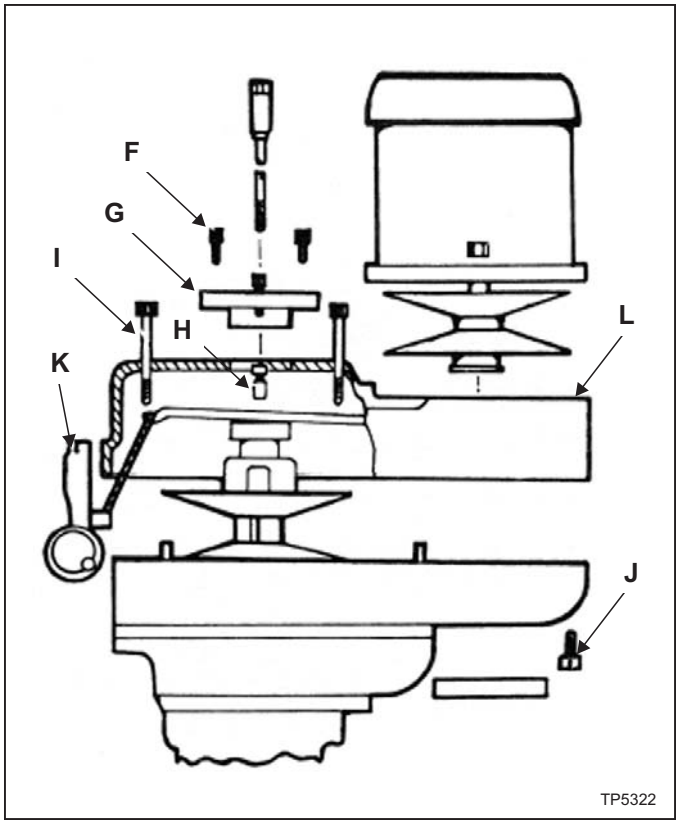

Figure 3.3 - Drive Belt Replacement

TIMING BELT REPLACEMENT

1. Remove the motor.
2. Lower the quill to full extent.
3. Remove the two lower cap screws “M”, Figure 3.4, from the speed changer housing.
4. Remove the four cap screws “N”.
5. Remove the top assembly “O”, and tap to clear dowels
6. Replace the belt.

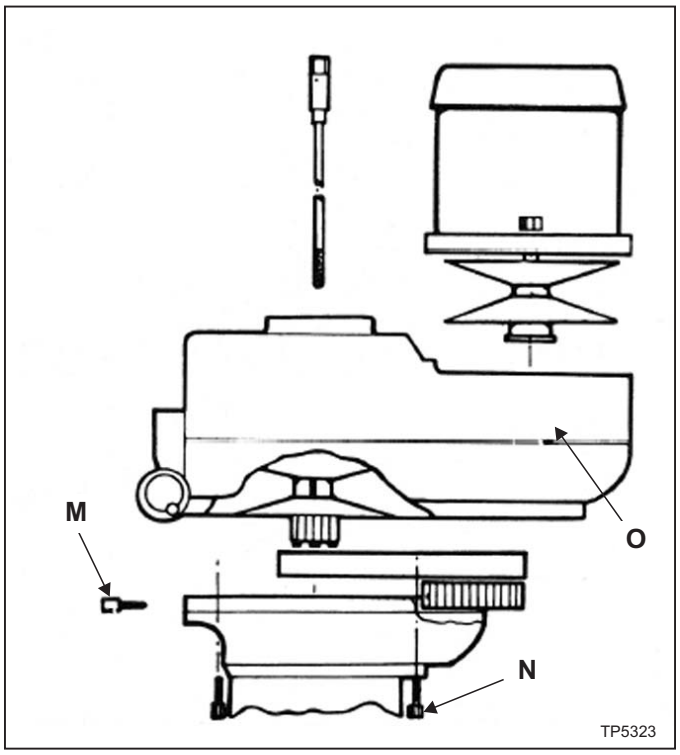

Figure 3.4 - Timing Belt Replacement

BRAKE SHOE REPLACEMENT

1. Remove the top section.
2. Remove the two screws “P”, Figure 3.5.
3. Remove the clutch hub assembly “Q”.
4. Replace the brake shoes “R”.
5. Remove the bearing, drive discs and circlips from the hub assembly “Q”.
6. Replace the bearing and housing “S”.
7. Thread hub “B” through the bearing and reassemble the discs, etc.

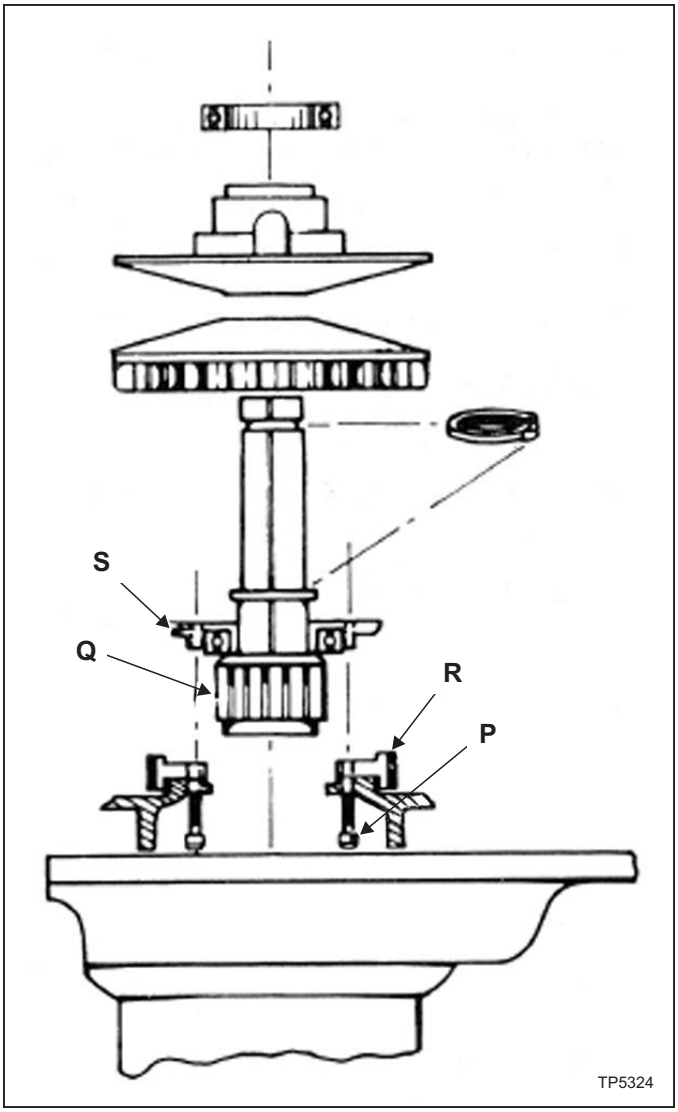

Figure 3.5 - Brake Shoe Replacement

MICRO FEED TRIP ASSEMBLY AND QUILL REMOVAL

1. Remove screw “A” and ball reverse lever “B”, Figure 3.6.
2. Remove retaining ring “C”, screw “D” and arm “E”.
3. Thread shaft “F” through micro nuts and remove.
4. Remove screw “G” and stop “H”.
5. Remove quill.
6. Clean all areas, oil liberally and reassemble.
7. Check correct operation of micro feed trip assembly together with feed trip linkage as per feed tripping adjustment (see Figure 3.8).

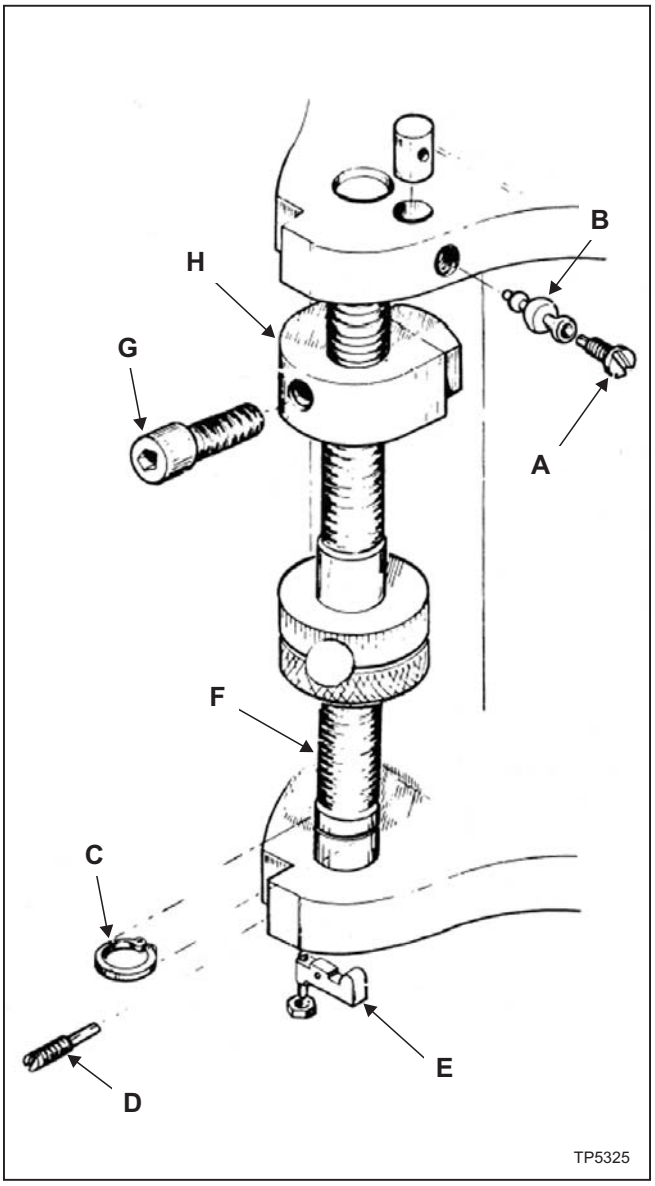

Figure 3.6 - Micro Feed Trip Assembly and Quill Removal

BALANCE SPRING REPLACEMENT

1. With quill in maximum up position apply quill lock.
2. Remove screw “I”, hub “J”, and key “K”, Figure 3.7.
3. Remove screws “L”, allowing housing to rotate slowly releasing spring tension.
4. Lift end of spring from pin on the pinion shaft.
5. Rotate housing “M” counter-clockwise from head casting.
6. Remove spring from housing and replace.
7. Refit spring to main housing casting. Turn housing clockwise until spring locates on pin in pinion shaft.

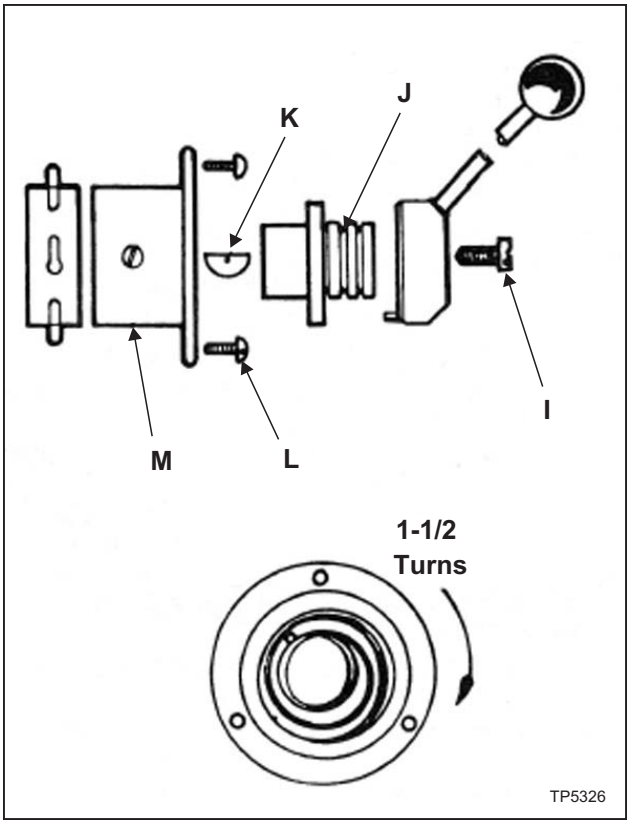

Figure 3.7 - Balance Spring Replacement

FEED TRIP ADJUSTMENT

1. Release locknut “N”, Figure 3.8.
2. Engage trip handle lever “P”.
3. Adjust micro nuts against quill stop “O”.
4. Slowly turn adjusting screw “Q” until lever “P” trips. If set to light will not be able to drill.
5. At this point secure locknut “N”.
6. Check for quick action response.

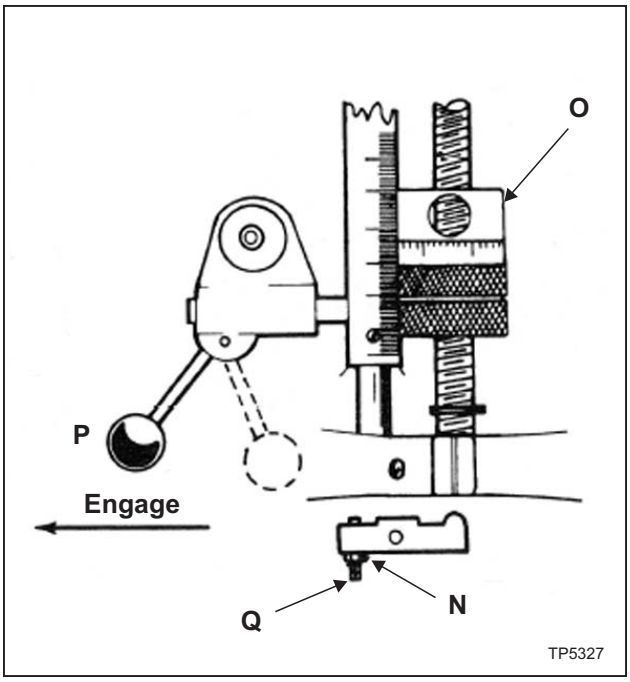

Figure 3.8 - Feed Trip Adjustment

COLLET ALIGNING SCREW REPLACEMENT

1. Use felt pen, mark reference line on quill and nose cap “S”, Figure 3.9.
2. Remove set screw “R”.
3. Unscrew nose cap “S”.
4. Remove lock screw “T” and collet aligning screw “U”.
5. Replace “U”; insert collet and check that the dog on the end of the screw does not interfere with the bottom of the guide slot.
6. Replace lock screw “T”.
7. Replace nose cap “S”; check felt pen markings for correct alignment.
8. Replace set screw “R”. CAUTION - DO NO OVERTIGHTEN as this will cause distortion.
9. Check gap “V” (.003”, .08mm)

NOTICE

Do not attempt to remove nose cap before removing set screw “R”. Doing so will cause serious damage.

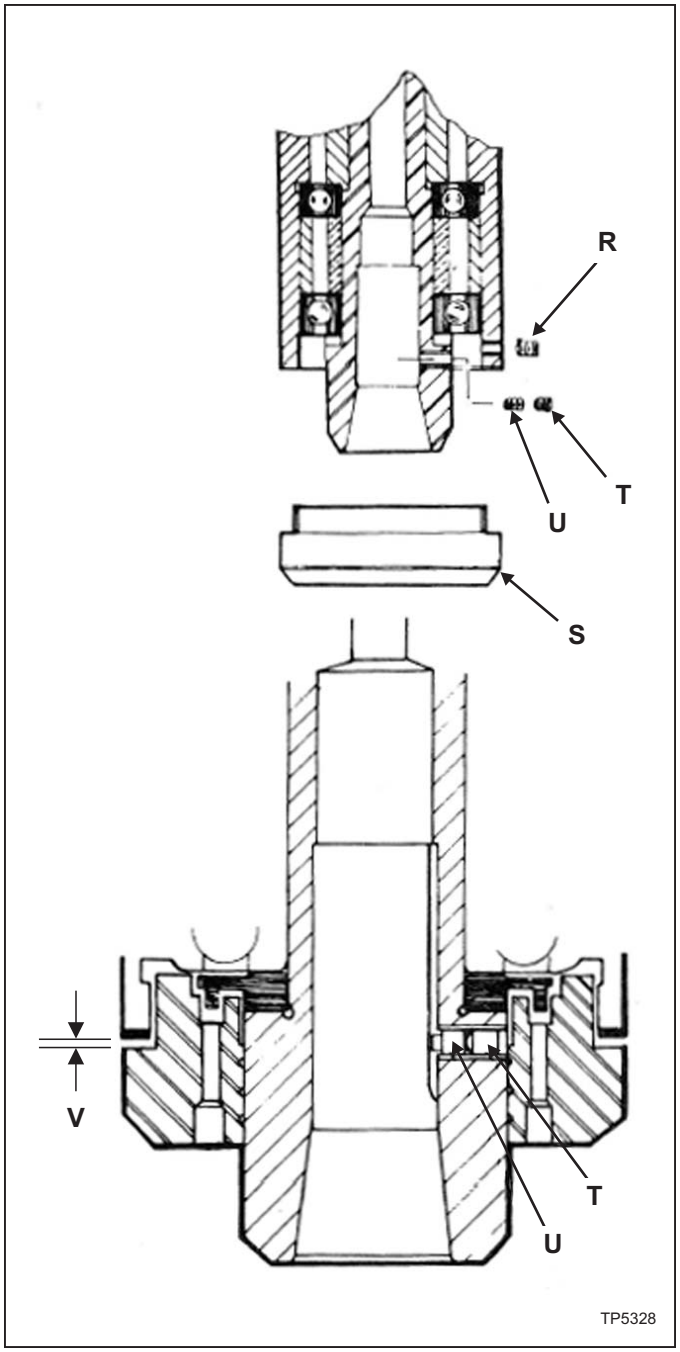

Figure 3.9 - Collet Aligning Screw Replacement

GIB ADJUSTMENT

ADJUSTMENT OF THE TABLE GIB

The table is equipped with a tapered gib and adjusting screws at the left and right sides of the table.

To Adjust the Gib:

1. Loosen table clamps "B", Figure 3.10.
2. Clean the slides and apply lubricant.
3. To tighten the gib:

   A) Loosen right gib screw "C", Figure 3.11.

   B) Tighten left gib screw "A", Figure 3.10, slightly and test the table movement.

   C) Repeat step B until a slight drag is felt when moving the table by hand.

   D) Tighten the right gib screw.

   To loosen the gib:

   A) Loosen left gib screw "A", Figure 3.10.

   B) Tighten right gib screw "C", Figure 3.11, slightly and test the table movement.

   C) Repeat step B until a slight drag is felt when moving the table by hand.

   D) Tighten the left gib screw.

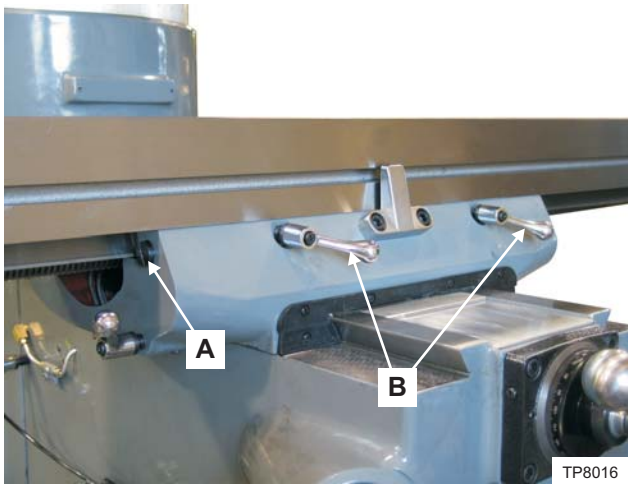

Figure 3.10 - Left Table Gib Adjustment Screw

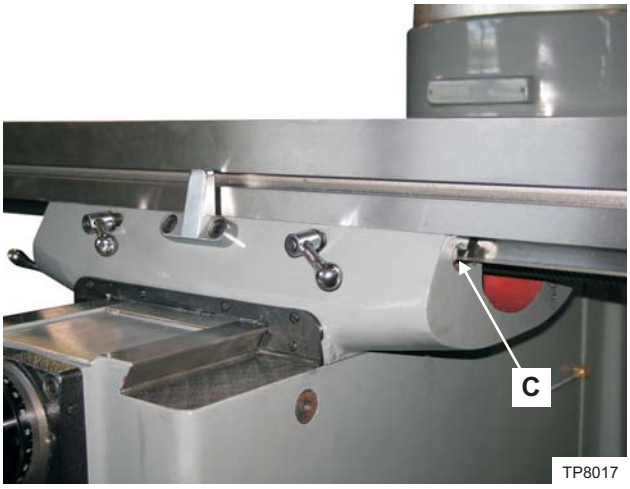

Figure 3.11 - Right Table Gib Adjustment Screw

ADJUSTMENT OF THE SADDLE GIB

The saddle is equipped with a tapered gib and adjusting screws at the front and rear of the saddle.

To Adjust the Gib:

1. Loosen saddle clamp "D", Figure 3.12.
2. Clean the slides and apply lubricant.
3. Remove wiper retainer "E" and wiper "F", Figure 3.12, to gain access to front gib screw "G", Figure 3.13.
4. Remove wiper retainer "H" and wiper "I", Figure 3.14, to gain access to rear gib screw "J", Figure 3.15.

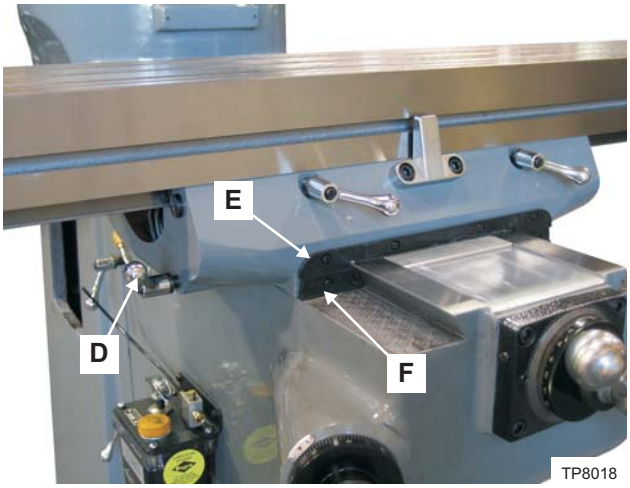

Figure 3.12 - Front Saddle Wiper and Retainer

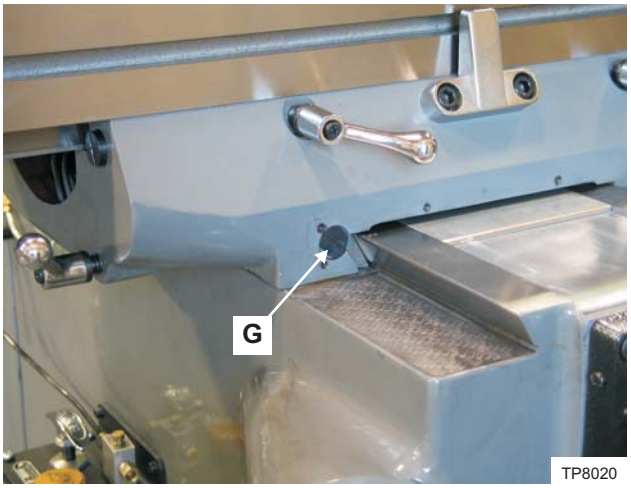

Figure 3.13 - Front Saddle Gib Adjustment Screw

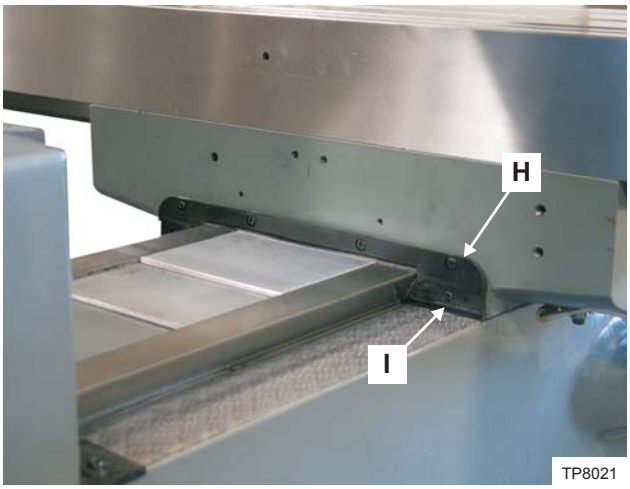

Figure 3.14 - Rear Saddle Wiper and Retainer

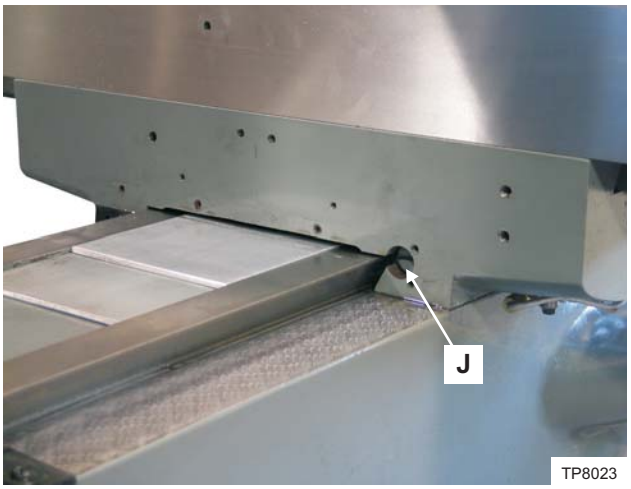

Figure 3.15 - Rear Saddle Gib Adjustment Screw

5. To tighten the gib:

A) Loosen the rear gib screw.

B) Tighten the front gib screw slightly and test the saddle movement.

C) Repeat step B until a slight drag is felt when moving the saddle by hand.

D) Tighten the rear gib screw.

- NOTE -

Press the wipers downward and inward while tightening the mounting screws.

E) Install the wipers and wiper retainers.

To loosen the gib:

A) Loosen the front gib screw.

B) Tighten the rear gib screw slightly and test the saddle movement.

C) Repeat step B until a slight drag is felt when moving the saddle by hand.

D) Tighten the front gib screw.

- NOTE -

Press the wipers downward and inward while tightening the mounting screws.

E) Install the wipers and wiper retainers.

ADJUSTMENT OF THE KNEE GIB

The knee is equipped with a tapered gib and adjusting screws at the top and bottom of the knee.

To Adjust the Gib:

1. Loosen the two knee clamps located on the left side of the knee.
2. Clean the slides and apply lubricant.
3. Remove wiper "K", Figure 3.16, to gain access to upper gib adjustment screw "L", Figure 3.17.

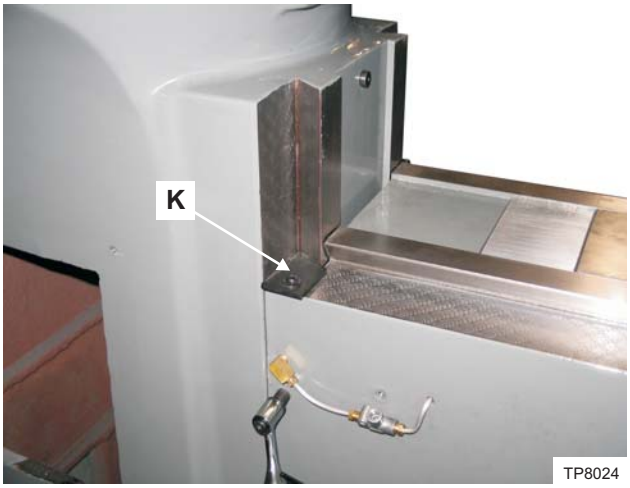

Figure 3.16 - Left Knee Wiper

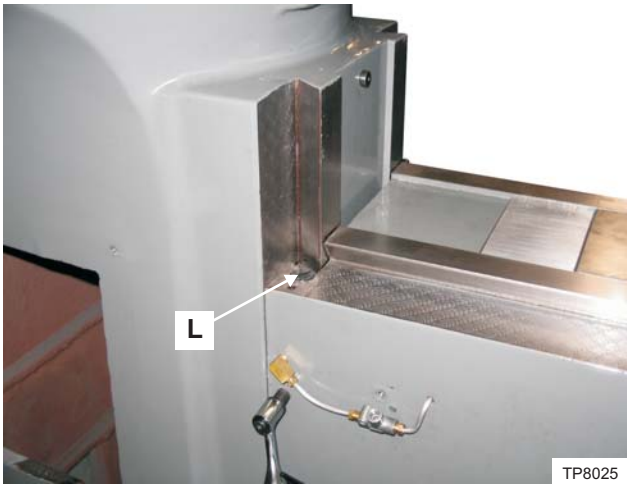

Figure 3.17 - Upper Knee Gib Adjustment Screw

4. To tighten the gib:

A) Loosen lower gib screw "M", Figure 3.18.

B) Tighten the upper gib screw slightly and test the knee movement.

C) Repeat step B until a slight drag is felt when moving the knee by hand.

D) Tighten the lower gib screw.

- NOTE -

Press the wiper downward and inward while tightening the mounting screw.

E) Install the wiper.

To loosen the gib:

A) Loosen the upper gib screw.

B) Tighten lower gib screw "M" Figure 3.18, slightly and test the knee movement.

C) Repeat step B until a slight drag is felt when moving the knee by hand.

D) Tighten the upper gib screw.

- NOTE -

Press the wiper downward and inward while tightening the mounting screw.

E) Install the wiper.

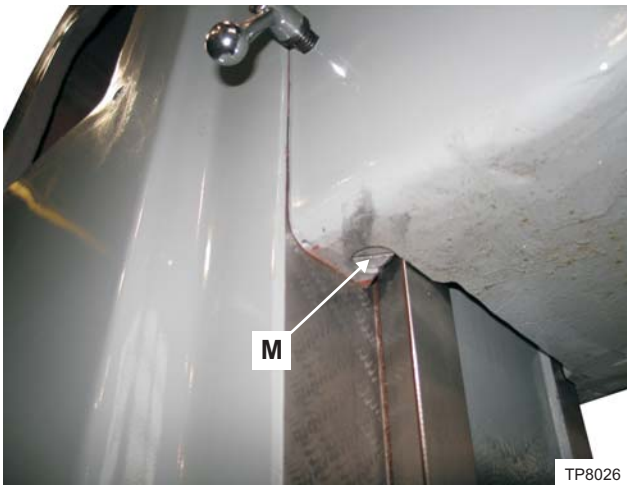

Figure 3.18 - Lower Knee
Gib Adjustment Screw

TABLE FEED SCREW BACKLASH ADJUSTMENT

1. Move the table to the center of travel.
2. Insert the larger end of the two-piece backlash adjustment tool, shown in Figure 3.19, into the left side of the saddle.
3. Loosen lock nut “P”, Figure 3.20, one full turn.
4. Use the smaller end of the backlash adjustment tool to engage lead screw adjusting nut "O".
5. Tighten the lead screw adjusting nut while slowly turning handle “N” until the backlash is .003 to .005 inches [.08 to .13 millimeters].
6. Use the larger end of the backlash adjustment tool to secure the lock nut.

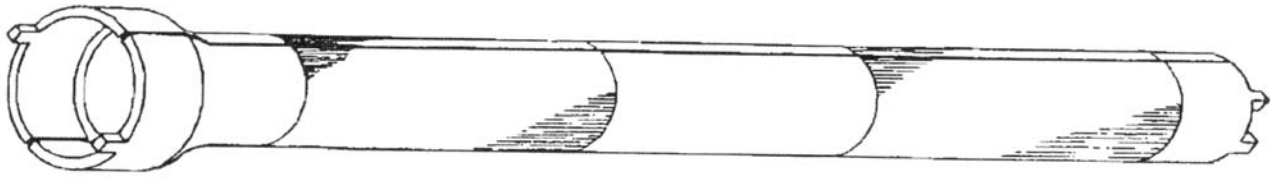

Figure 3.19 - Two-Piece Backlash Adjustment Tool

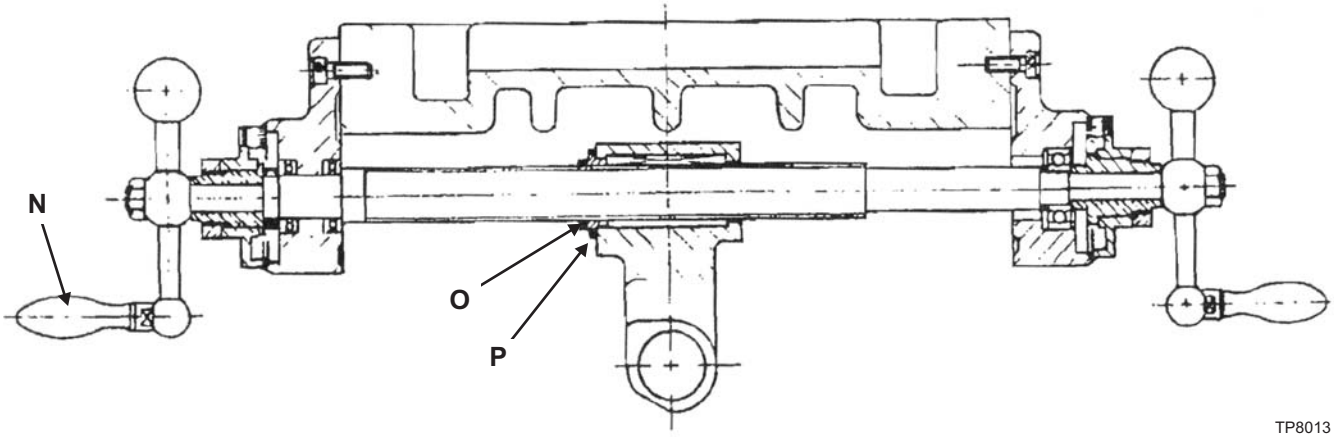

Figure 3.20 - Table Backlash Adjustment

SADDLE FEED SCREW BACKLASH ADJUSTMENT

1. Move the saddle back (toward the column) 3/4 of the way through the range of travel.
2. Remove four socket head cap screws securing bracket “Q”, Figure 3.21, to knee.
3. Pull the saddle forward to expose lock nut “R” and adjusting nut “S”, Figure 3.22, through the hole in the front of the knee.
4. Use the larger end of the two-piece backlash adjustment tool, shown in Figure 3.19, to loosen lock nut “R”, Figure 3.22.
5. Use the smaller end of the backlash adjustment tool to engage lead screw adjusting nut "S".
6. While slowly turning handle “T”, tighten the adjusting nut until backlash is .003 to .005 inches [.08 to .13 millimeters].
7. Tighten the lock nut.
8. Move the saddle back and replace the four screws securing bracket “Q”, Figure 3.21, to the knee.

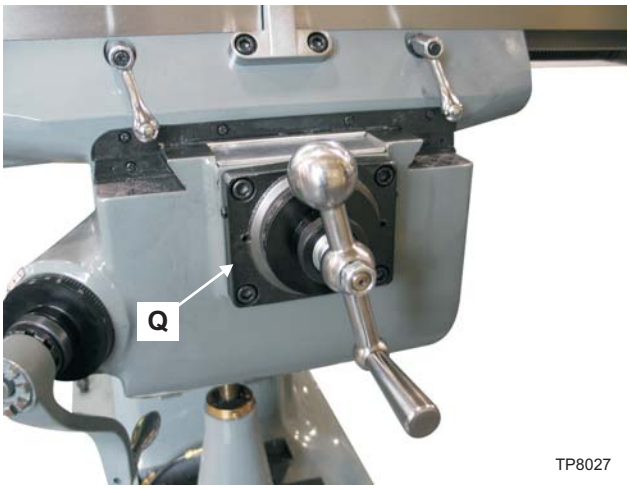

Figure 3.21 Saddle Feed Handle and Mounting Bracket

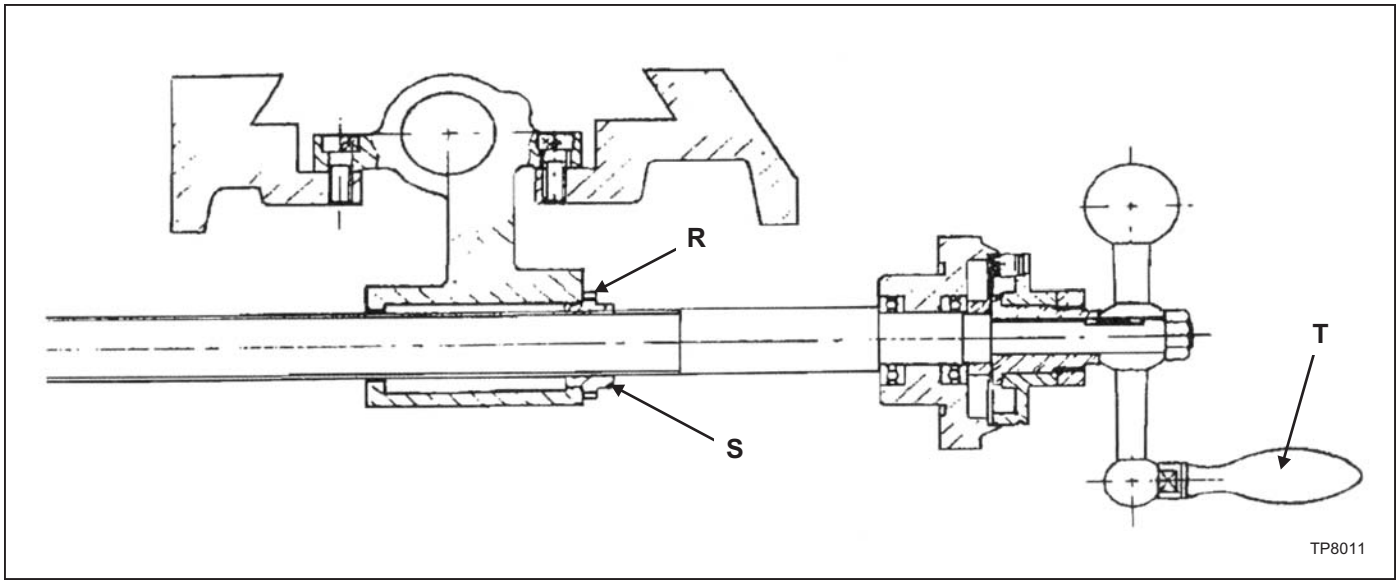

Figure 3.22 - Saddle Backlash Adjustment

- NOTES -

CHAPTER 4 - PARTS LISTINGS

2J-HEAD TOP HOUSING

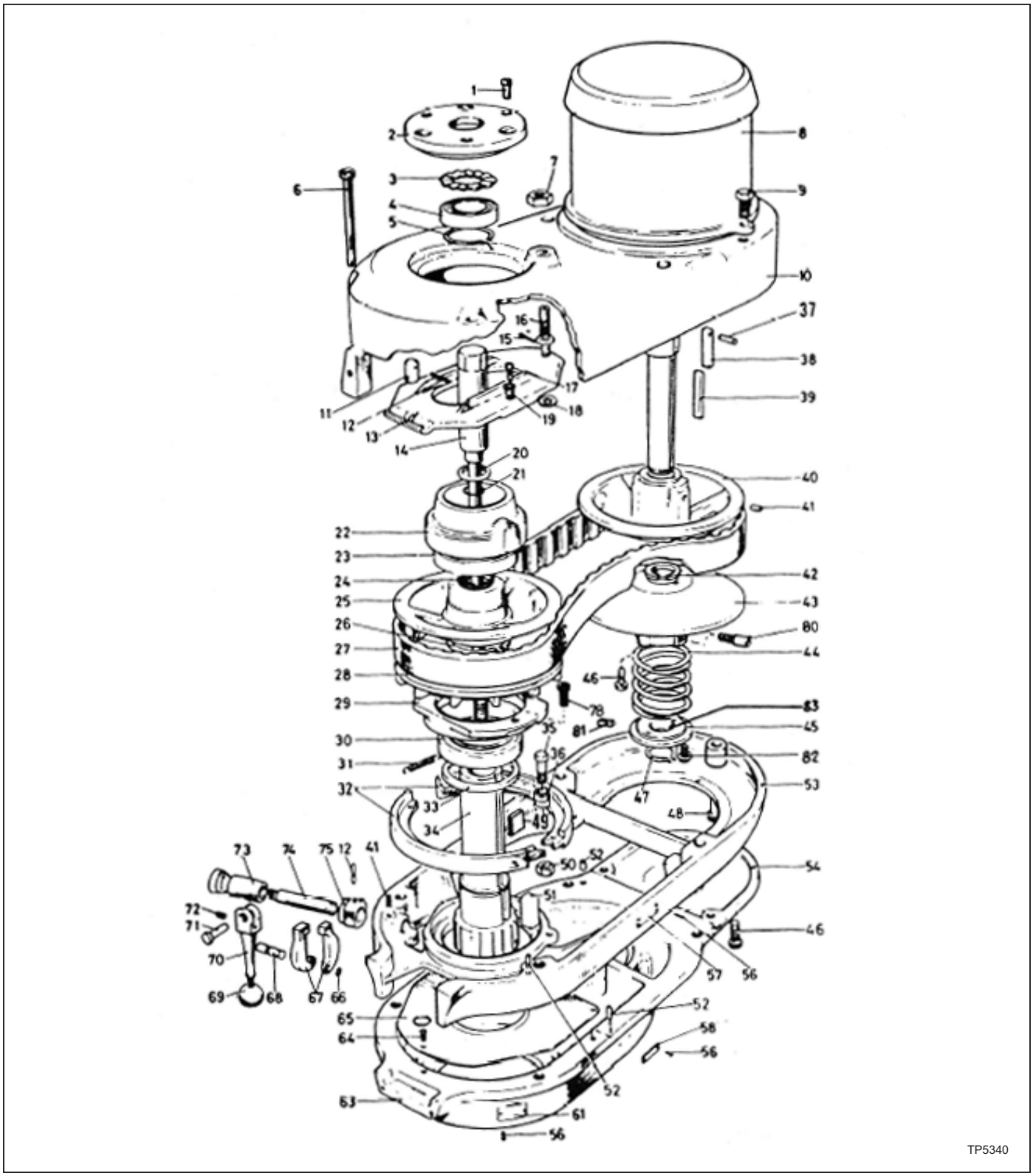

Figure 4.1 - 2J-Head Assembly

2J-HEAD TOP HOUSING

Item	Part Number	Description	Qty
1	BP 11011033	Screw, Socket Hd Cap, .250”-20 x .750” Lg	3
2	BP 12180094	Cap, Top Bearing	1
3	BP 11181977	Washer, Wave Spring	1
4	BP 11180252	Bearing, Ball, Fafnir #9107 NNP	1
5	BP 11180848	Ring, Snap, #5100-137	1
6	BP 11011069	Screw, Socket Hd Cap, .312”-18 x 6.00”	2
7	BP 11011745	Nut, UNC Hex Jam, .375”-16	1
8	BP 11550001A	Motor, 2 HP, Multi Volt, 50/60	1
9	BP 11011148	Screw, Hex Hd Cap, .375”-16 x 1.00”	2
10**	BP 12180051	Housing, Upper Belt (see BP 12183923)	1
11	BP 12180066	Stud, Speed Change Chain	1
12	BP 11010535	Pin, Roll, .156”∅ x 1.00” Lg	2
13	BP 11180058	Plate, Speed Change	1
14	BP 12183920	Assembly, Drawbar	1
15	BP 11010606	Pin, Cotter, .093”∅ x .750”	1
16	BP 12180074	Stud, Speed Change Plate Pivot	1
17	BP 11011020	Screw, Socket Hd Cap, #10-32 x .750”	2
18	BP 11180095	Washer	1
19	BP 12180089	Sleeve, Pivot	2
20	BP 12180093	Washer, Drawbar	1
21	BP 11180915	“O”-Ring, Parker # 2-14	1
22	BP 12180056	Housing, Spindle Pulley Bearing Sliding	1
23	BP 11170262	Bearing, #RM9110NPP	1
24	BP 11182124	Insert, Plastic	2
25	BP 12183934	Varidisc, Adjustable Drive A	1
26	BP 11180855	Ring, Retaining, #5102-156	1
27	BP 11182120	Belt, Varispeed	1
28	BP 12180082	Varidisc, Stationary Drive	1
29	BP 12180043	Cap, Brake and Bearing	1
30	BP 11170262	Bearing, #RM9110NPP	1
31	BP 11182081	Spring, Brake	2
32	BP 12180073	Shoes, Brake	2
33	BP 12180078	Spacer, Spindle Pulley	1
34	BP 12180042	Assembly, Spindle Pulley Hub	1
35	BP 11011138	Screw, Hex Hd Cap, .250”-20 x .750”	1
36	BP 12180071	Sleeve, Brake Shoe Pivot Sleeve	1
37	BP 11010513	Pin, Roll, .125” x .437”	1
38	BP 12550007	Key, Drive, Fixed Varidisc	1
39	BP 12550004	Assembly, Key, Drive, Varidisc	1
40	BP 12550006	Varidisc, Stationary Motor	1
41	BP 11011287	Screw, Stainless Steel, .250”-20 x .250”	2
42*	BP 11182126	Insert, Plastic Replaceable Type	2
43	BP 12550029	Assembly, Varidisc and Spring	1
44	BP 11182083	Spring, Varidisc Motor Shaft	1
45	BP 11550003	Collar, Adjustable Varidisc Spring	1
46	BP 11011022	Screw, Socket Hd Cap, #10-24 x 1.00”	3
47	BP 11150843	Ring, Snap	1
48	BP 11011052	Screw, Socket Hd Cap, .132”-18 x .750” Lg	1

Item	Part Number	Description	Qty
49	BP 11182122	Key, Plastic	1
50	BP 11011707	Nut, Hex Jam, .250”-20	1
51	BP 12180084	Key	1
52	BP 12180107	Pin, Taper, #4 x 1.00”	4
53**	BP 12180052	Base, Belt Housing (see BP 12183923)	1
54	BP 12180088	Cover, Motor Pulley	1
56	BP 11011552	Screw, Drive, Type U, #0 x .250”	4
58	BP 11182893	Nameplate, Hi-Low Range	1
61	BP 11182894	Nameplate, Quill Feed	1
63	BP 12180053	Housing, Gear	1
64	BP 11011443	Screw, Round Hd Machine, #10-24 x .375”	3
65	BP 11185030	Plate, Gear Housing	1
66	BP 11180818	Ring, Snap, #5100-25	1
67	BP 11182306	Finger, Brake Operating	2
68	BP 12180083	Stud, Brake Finger Pivot	1
69	BP 11192151	Knob, Bakelite, .250”-20	1
70	BP 12190133	Handle, Brake	1
71	BP 12180046	Pin, Brake Lock	1
72	BP 11011260	Screw, Stainless Steel, #10-32 UNF x .250”	1
73	BP 12180104	Sleeve, Brake Lock Shaft	1
74	BP 28025521	Shaft, Brake Lock	1
75	BP 12180069	Cam, Brake Lock	1
78	BP 11011031	Screw, Socket Hd Cap, .250”-20 x .625”	1
80	BP 11011019	Screw, Flat Hd Cap, #10-32 x .500”	1
82	0100204	Screw, Socket Hd Cap, #8-32 x .250”	1
83	BP 12550008	Key	1

* Non-replaceable turcite bushing must be purchased as part of varidisc assembly BP 12550029.

**Items 10 and 53 sold as assembly only.

- NOTE -

IMPORTANT - for 1-1/2 HP, substitute the following parts.

Item	Part Number	Description	Qty
34	BP 12182004	Assembly, Spindle Pulley Hub	1
37	BP 11010513	Pin, Roll, .125” x .437”	1
38	BP 12180102	Key, Pulley	1
39	BP 11182121	Key, Plastic	1
40	BP 12180080	Varidisc, Stationary Motor	1
42*	BP 11182123	Insert, Plastic	2
43	BP 12180165	Assembly, Varidisc and Spring	1
45	BP 11182305	Collar, Adjustable Varidisc Spring	1
47	BP 11180860	Ring, Snap	1

* Non-replaceable turcite bushing must be purchased as part of varidisc assembly BP 12180165.

2J-HEAD BACK GEAR

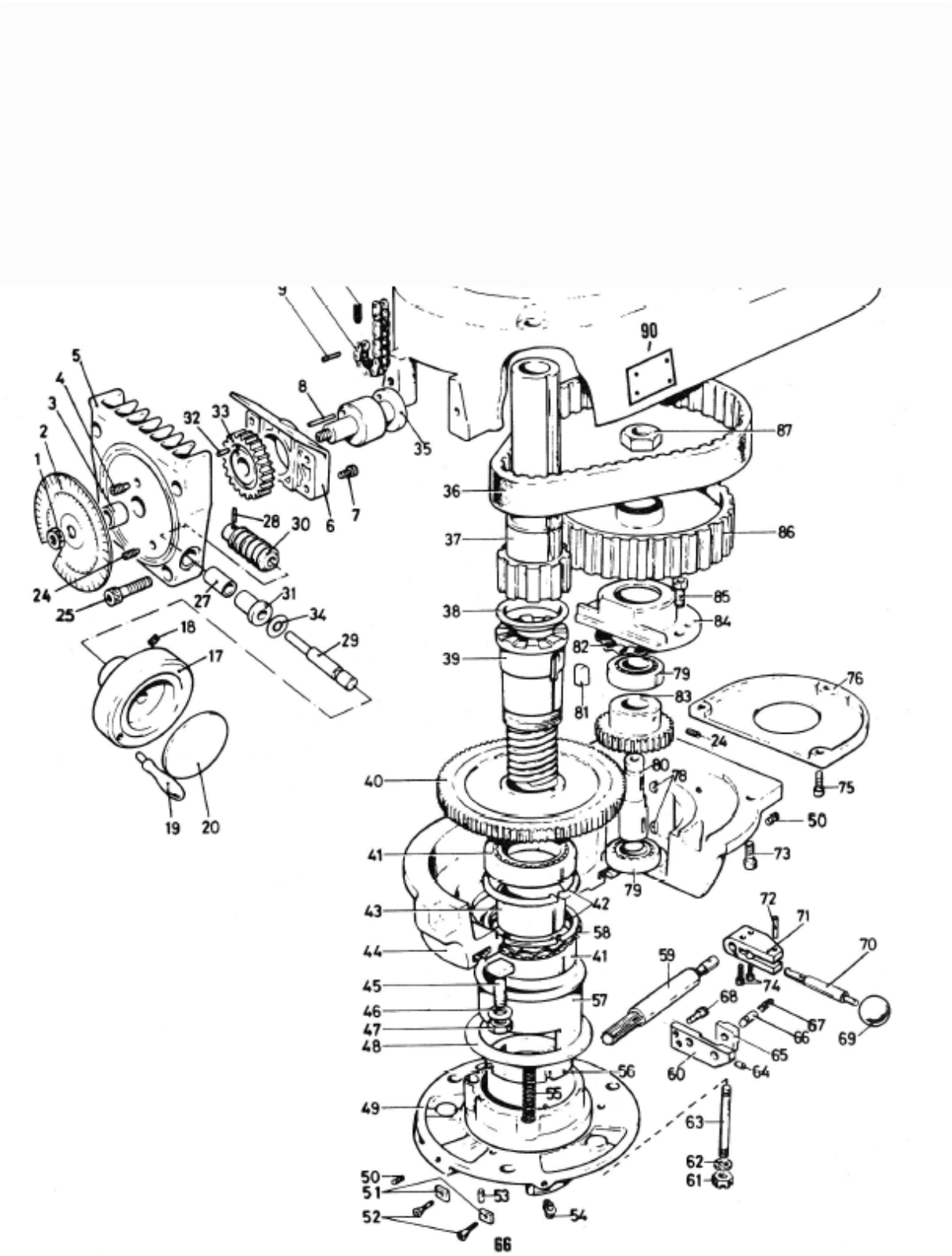

Figure 4.2 - 2J-Head Back Gear Assembly

BASIC MACHINE

Item	Part Number	Description	Qty
1	BK 0001500C141	Body	1
2	BK 0001500C103	Column	1
3	BK 0001500C139	Elevating screw nut (Inch)	1
4	BK 0001500C137	Elevating screw (Inch)	1
5	BK 0001500C077	Bevel gear (Big)	1
6	BK 0001500C175	Knee	1
7	BK 0001500C096	Bevel gear (Small)	1
8	BK 0001500C094	Elevating shaft	1
9	BK 0001500C092	Bearing Housing	1
10	BK 0001500C090	Bearing Cap	1
11	BK 0001500C088	Dial holder	1
12	BK 0001500C1381	Dial with 100 graduation (Inch)	1
13	BK 0001500D021	Dial nut	1
14	BK 0001500C085	Gear shaft clutch insert	1
15	BK 0001500C084	Knee knob	1
16	BK 0001500C083	Ball crank handle lever	1
17	BK 0001500C055	Knee clamp	1
18	BK 0001500C041	Clamp adjusting screw	2
19	BK 0001500C044A	Scraper set	1
20	BK 0001500C044B	Scraper set	1
21	BK 0001500C063	Dustproof cover	1
22	BK 0001500C064	Dustproof cover	1
23	BK 0001500C118	Spider	1
24	BK 0001500C124	Turret	1
25	BK 0001500C120	Ram pinion	1
26	BK 0001500C126	Ram lock plunger	2
27	BK 0001500C037	Table lock bolt handle	4
28	BK 0001500C110	Gib lock screw	2
29	BK 0001500C128	Ram pinion set	1
30	BK 0001500C127	Locking bolt	4
31	BK 000146603	Nut, 1/2"	1
32	BK 0001500C172	Ram	1
33	BK 0001500C002	Ram adaptor	1
34	BK 0001500C001	Tilting worm	1
35	BK 0001500C011	Hook	1
36	BK 0001500C008	Vertical adjusting worm shaft	1|
37	BK 0001500C019	Adaptor locking bolt	3
38	BK 0001500C004	Adaptor pivot stud locknut	1
39	BK 000284001	Washer, M14	3
40	BK 0001500C017	Head housing shaft	1
41	BK 000823126	Snap Ring, M26	2
44	BK 000631702	Key, 5 X 5 X 50	1
45	BK 0001500C006	Worm	1
46	BK 0001500C012	Worm thrust washer	1
47	BK 0001500C003	Adaptor scale	1
48	BK 0001500C125	Column side cover	2
49	BK 0001500C130	Oil filter	2
50	BK 000631703	Key, 5 X 5 X 15	2

Item	Part Number	Description	Qty
51	BK 000026602	Bearing	1
52	BK 0001500C076	Washer	5
53	BK 000026601	Bearing	2
54	BK 000146602	Nut, 3/8	2
55	BK 000033804	Hexagon socket screw	3
56	BK 0001500C170B	Leveling screw	4
57	BK 0001800C146	Leveling pads	4
58	BK 000631704	Key, 4 X 4 X 20	1
59	BK 000033805	Hexagon socket screw, M6 X 20	6
62	BK 000033806	Hexagon socket screw, M6 X 16	8
63	BK 000026603	Bearing	1
64	BK 0001500C069	Knee lock plunger	1
65	BK 000033807	Hexagon socket screw, M10 X 20	2
66	BK 000033808	Hexagon socket screw, M5 X 1	4
67	BK 000033802	Cross-Recessed Head Screw	2
68	BK 000033809	Screw, M2 X 5	6
69	BK 0001500C144	Zeroing Point Plate	1
70	BK 001032701	Nipple, 1/8PT	1
71	BK 0001500C007	Washer	1
72	BK 0001500C111	Turret-ram gib	1
73	BK 000033810	Set Screw, M6 X 10	1
74	BK 000146604	Hexagon socket nut	1
77	BK 0001500C048	Turret scale	1
78	BK 0001500C015	Angle plate	1
81	BK 0001500C013	Ram scale	1
82	BK 0001500C318	Body set screw	2
83	BK 0001500C317	Dust cover screw	1

Not Shown:

84	BK 0001500C134	Backlash adjustment tool	2
85	BK 0008150 K	Box wrench kit	1
86	BK 0001500C136	Tool Box	1
87	BK 000815001	Open-End Wrench	1

TABLE AND LEAD SCREW ASSEMBLY

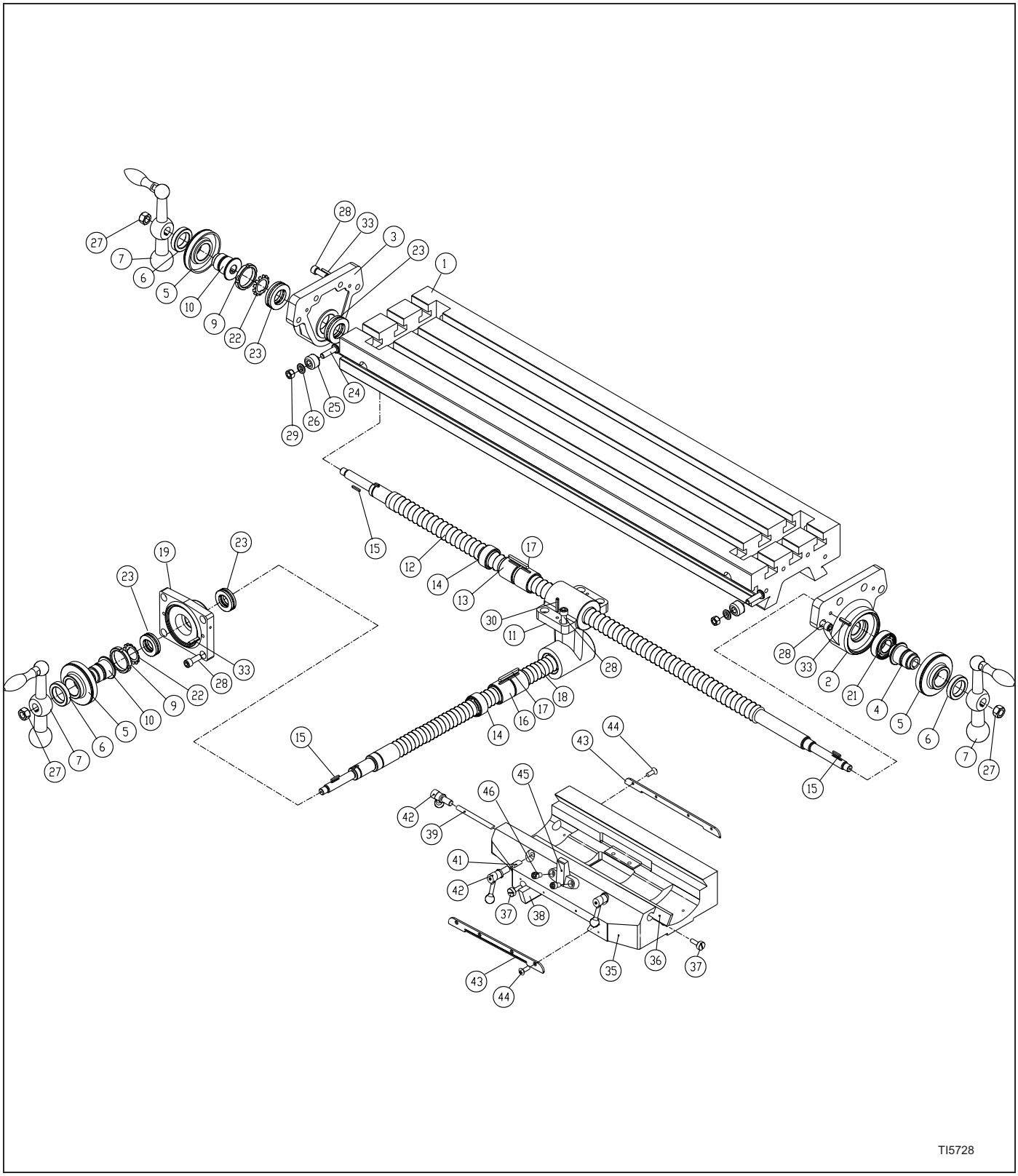

Figure 4.5 - Table and Lead Screw Assembly

TABLE AND LEAD SCREW ASSEMBLY

Item	Part Number	Description	Qty
1	BK 0001500C035	Table	1
2	BK 0001500D024B	Right leadscrew bracket	1
3	BK 0001500D023B	Left leadscrew bracket	1
4	BK 0001500D005	Right dial holder	1
5	BK 0001500D0161	Dial (inch)	3
6	BK 0001500C086	Dial nut	3
7	BP 12060271	Ball crank handle	3
9	BK 0001500D006	Lock nut	2
10	BK 0001500D021	Left dial holder	2
11	BK 0001500D022	Feed nut bracket	1
12	BK 0001500D074A	X leadscrew	1
13	BK 0001500D033A	X lead screw nuts (Inch)	2
14	BK 0001500D017	Backlash adjustment nut	2
15	BK 000631701	Key, 3 X 3 X 20	3
16	BK 0001500D034A	Cross feed screw nut (Inch)	2
17	BK 000631702	Key, 5 X 5 X 50	2
18	BK 0001500D076	Y leadscrew	1
19	BK 0001500D025A	Cross feed bearing bracket	1
21	BK 000026601	Bearing	1
22	BK 001150101	Bearing washer	2
23	BK 000026604	Bearing	4
24	BK 0001500C031	T bolt	2
25	BK 0001500C032	Table stop piece	2
26	BK 0001500C073	Washer	2
27	BK 000146601	Nut, 1/2	3
28	BK 000033801	Screw, 3/8 X 1	16
29	BK 000146602	Nut, 3/8"	2
30	BK 000142401	Overload clutch lever spring plunger, 5 X 30	2
33	BK 000142402	Overload clutch lever spring plunger, 6 X 25	6
35	BK 0001500C052	Saddle	1
36	BK 0001500C043	Saddle table jib	1
37	BK 0001500C041	Adjusting screw	4
38	BK 0001500C049	Gib (left & right)	1
39	BK 0001500C039	Saddle lock plunger	1
41	BK 0001500C059	Table lock plunger	2
42	BK 0001500C037	Table lock bolt handle	3
43	BK 0001500C044	Felt wipers	2
44	BK 000033802	Cross-Recessed Head Screw, 3/16 X 3/8	8
45	BK 0001500C042	Table stop bracket	1
46	BK 000033803	Hexagon socket screw	2

FLOOD COOLANT

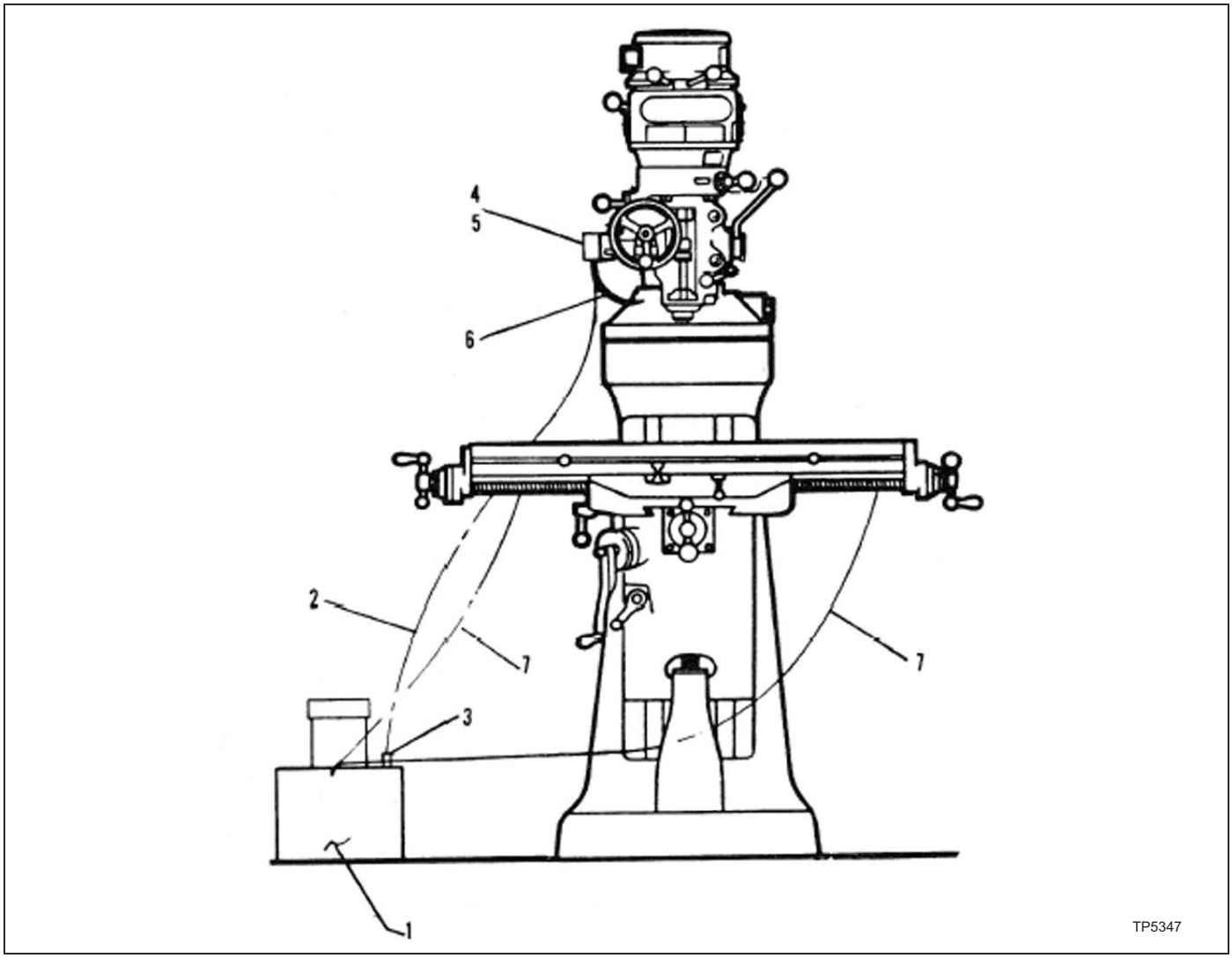

Figure 4.6 - Flood Coolant Assembly

Item	Part Number	Description	Qty
1	BP 11713642	Tank, Pump and Motor	1
2	BP 11715470	Tubing, Coolant Pressure Hose, Vinyl, .50”∅ x .625”	10 ft
3	BP 11565476	Valve, Check	1
4	BP 12561010	Block, Manifold	1
7	BP 11565470	Tubing, Drain Hose, Vinyl, .750” x 1000”	15 ft
One Nozzle			
5	BP 11563490	Valve, Shut-Off	1
6	BP 11560264	Hose, Flexible Nozzle Coolant, 21” Lg	1
Two Nozzles			
5	BP 11563490	Valve, Shut-Off	2
6	BP 11560264	Hose, Flexible Nozzle Coolant, 21” Lg	2

LUBRICATION SYSTEM

STANDARD MACHINE

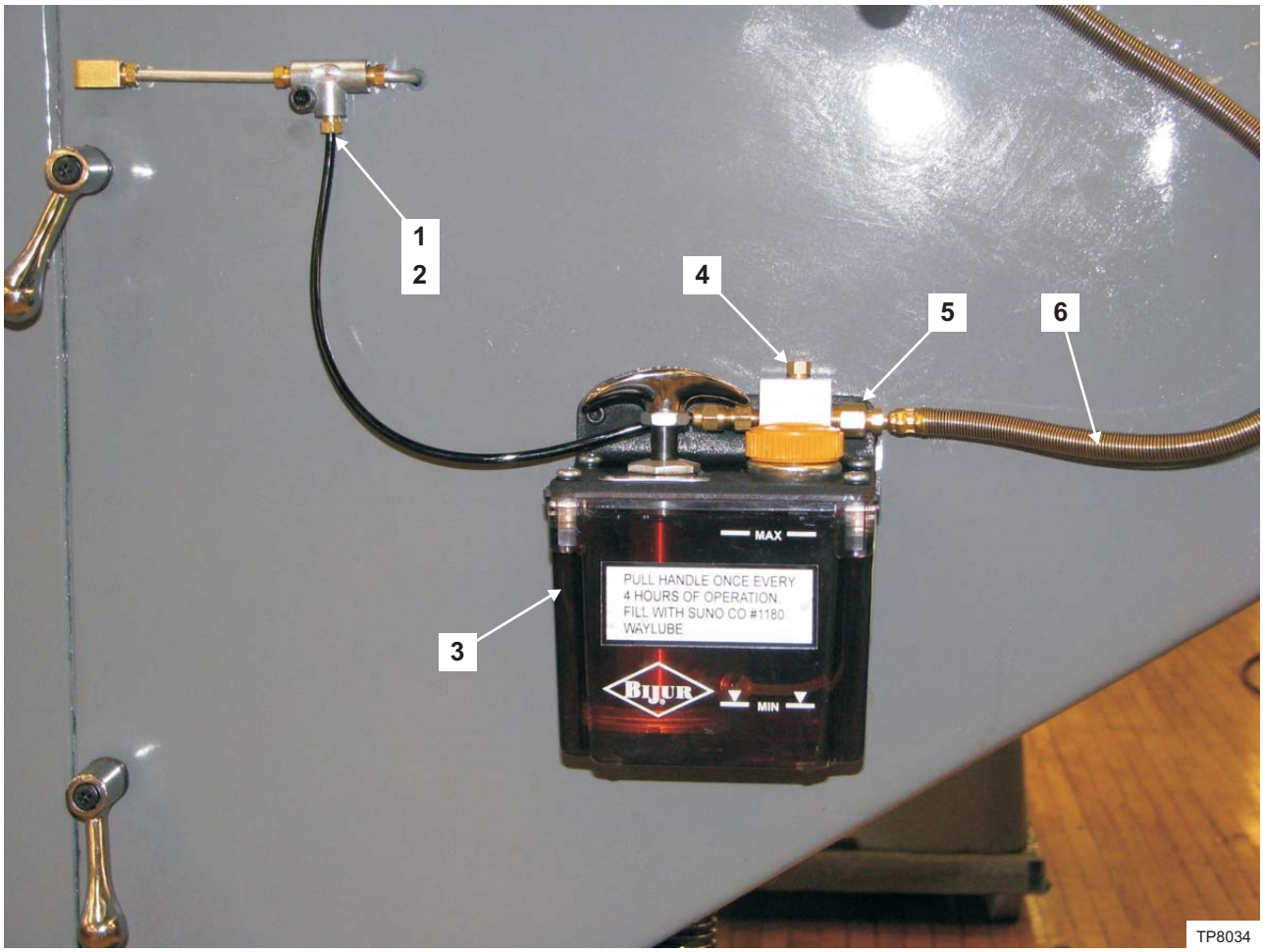

Figure 4.7 - Lubrication System
(Standard Machine)

Item	Part Number	Description	Qty
1	BP 11060490	Ferrule	1
2	BP 11060491	Nut	1
3	BP 11060492	Lubricator Kit	1
4	BP 11060493	Plug	1
5	BP 11060494	Adapter	1
6	BK 0001500LU150	Hose, Lubrication Spring	1

MACHINE WITH SPLASHGUARD OPTION

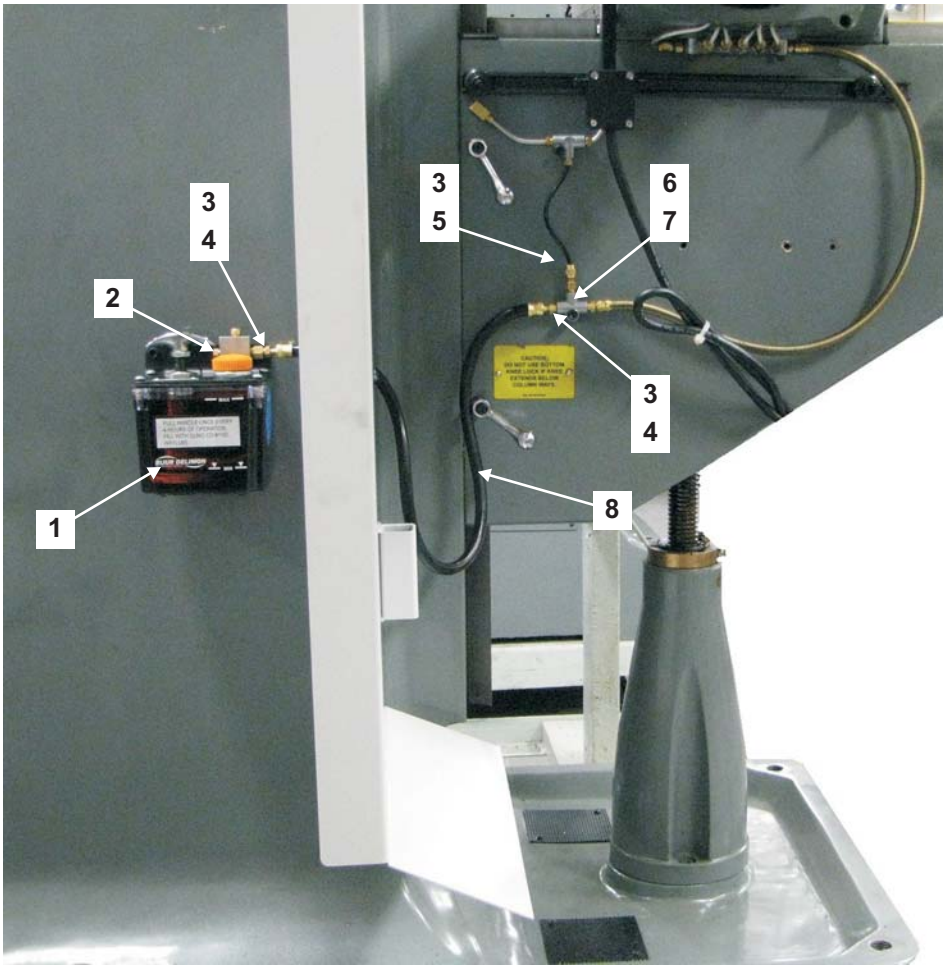

TP8963

Figure 4.8 - Lubrication System
(Machine with Splashguard Option)

Item	Part Number	Description	Qty
1	BP 11060492	Lubricator Kit	1
2	BP 11060493	Plug	1
3	LH 0011030	Nut, Lubrication Line	3
4	BP 28303617	Ferrule, Double	2
5	BP 11060490	Ferrule, Single	1
6	BP 11413212	Junction, 3 Way	1
7	MS 0103619	Screw, M6-1.0 x 20mm	1
8	BP 11413285	Hose, 24"	1

REPLACEMENT MOTOR ASSEMBLIES

Motor Assembly 2J-Head 2 HP Unified without NFPA, BPA12550001

Part Number	Description	Qty
BP 11010514	Pin, Roll, .125 X .500	1
BP 11012760	Marker, 230 Volt	1 *
BP 11550001A	Motor, 2 HP Multi Volt 50/60	1
BP 11562534	Wire Nut Connector, Medium, Type-Y	3
BP 12550007	Key, Drive, Fixed Varidisc	1
BP 12550006	Varidisc, Motor Stationary	1
BP 11012762	Marker, 460 Volt	1 *
BP 12550029	Varidisc & Spring Assembly	1
BP 11012759	Marker, 208 Volt	1 *
BP 11012761	Marker, 380 Volt	1 *
BP 11012770	Marker, 200 Volt	1 *
BP 11012771	Marker, 400 Volt	1 *
BP 11012772	Marker, 416 Volt	1 *
BP 11150843	Ring, Retaining	1
BP 11012764	Tape, Ground	1
BP 11598154	Reversing Switch and Cable Assembly	1

* Marker is selected based on motor voltage.

Motor Assembly 2J-Head 2 HP Unified with NFPA

Contact Sales Department for Part Number.

Replacement Motors Available

Part Number	Description
BP 11190161HQ	Motor, 1 HP, 230/460
BP 11550001A	Motor, 2 HP, Multi Volt, 50/60

2J MILLING HEAD

1-1/2 HP – Spare Parts

Part Number	Description	Qty
BP 11182120	Belt, Varispeed	1
BP 11182106	Belt, Timing	1
BP 12180073	Shoe, Brake, Set	1
BP 11182081	Spring, Brake	1
BP 11182121	Key, Motor	1
BP 11182122	Key, Plastic	1
BP 12193437	Assembly, Clockspring and Cover	1
BP 12180117	Lubricant, Gear	1
BP 11183147	Lubriplate	1
BP 11190238	Bearing, Spindle, Pair	1
BP 11190237	Bearing, Spindle	1
BP 11192403	Strainer, Felt	2
BP 11191942	Lockwasher	2
BP 12193540	Screw, Set, R-8 Collet	6

2 HP – Spare Parts

Same as above except:

Part Number	Description	Qty
BP 11552106	Belt, Timing	1
BP 12550004	Assembly, Key, Drive, Varidisc	1
BP 11182122	Key, Plastic	1

METRIC CONVERSION KIT

BP 2184000 – 2J-Head, Metric Conversion Kit

Part Number	Description	Qty
BP 11195307	Scale	1
BP 12191013	Assembly, Stop	1

NFPA ELECTRICAL CASE (Option)

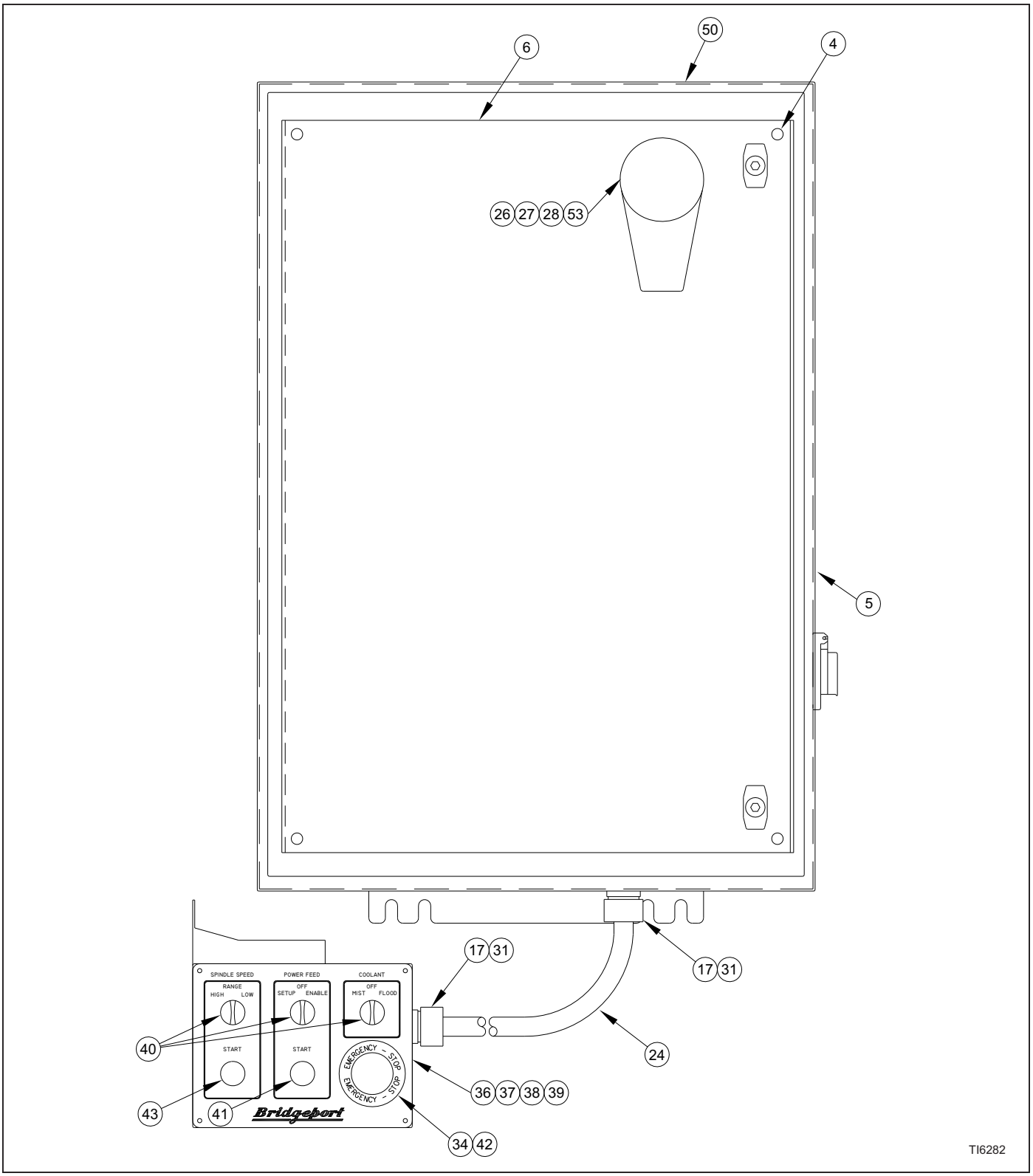

Figure 4.9 - NFPA Electrical Case:
Front View with Operator Pendant

NFPA ELECTRICAL CASE (Option)

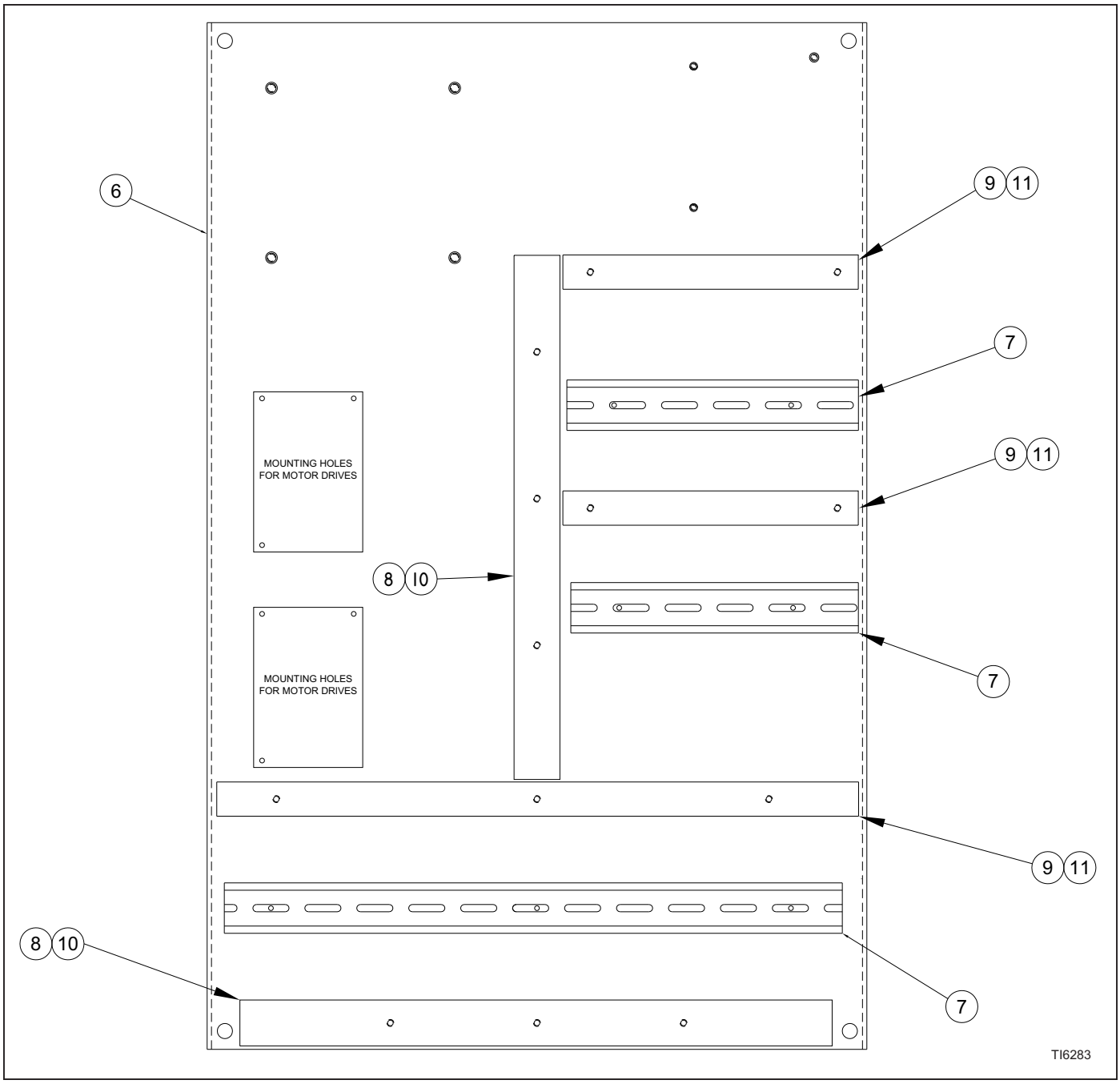

Figure 4.10 - NFPA Electrical Case:
Interior View with Mounting Rails and Wire Ducts

NFPA ELECTRICAL CASE (Option)

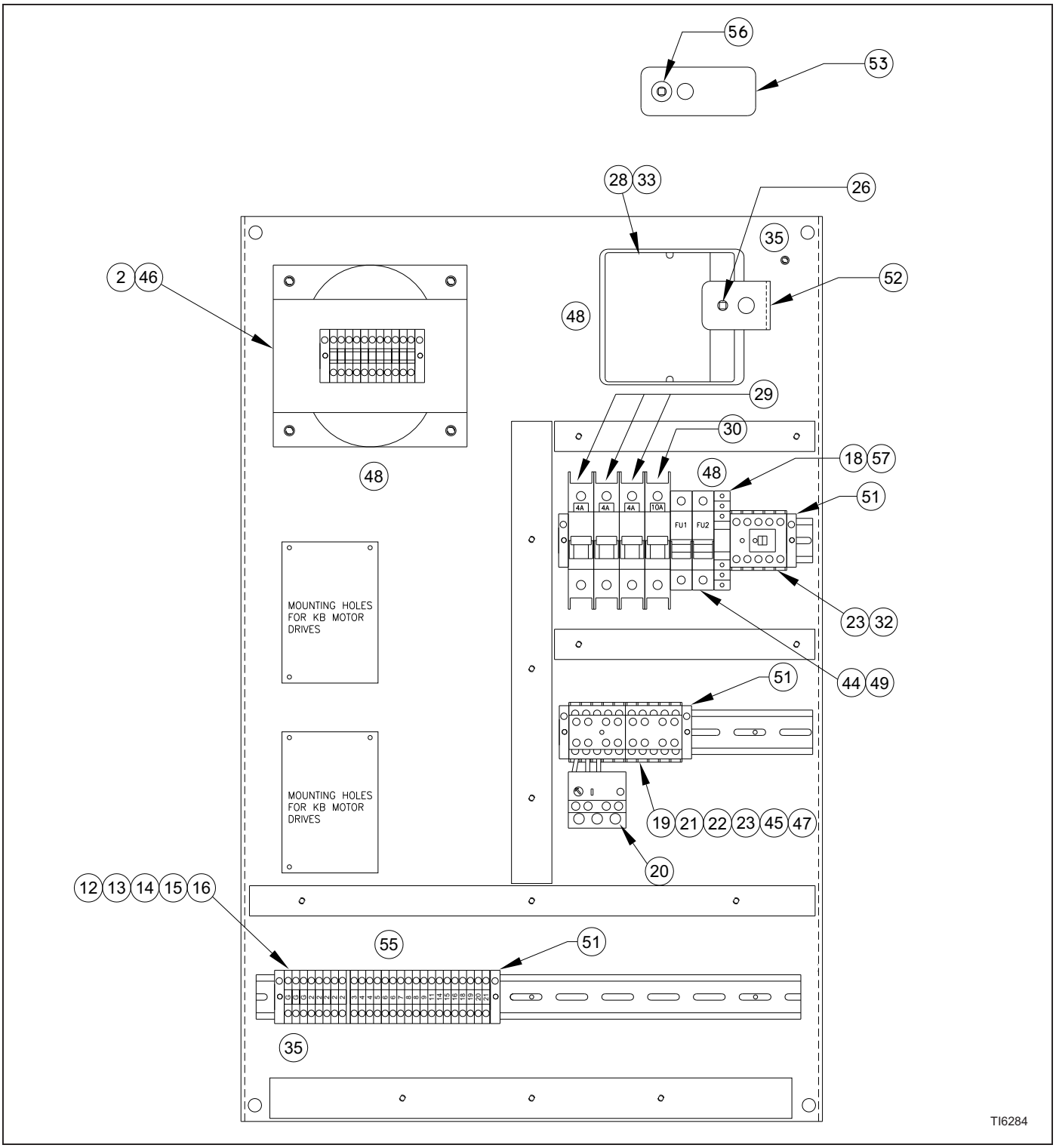

Figure 4.11 - NFPA Electrical Case:
Interior View with Electrical Components

NFPA ELECTRICAL CASE (Option)

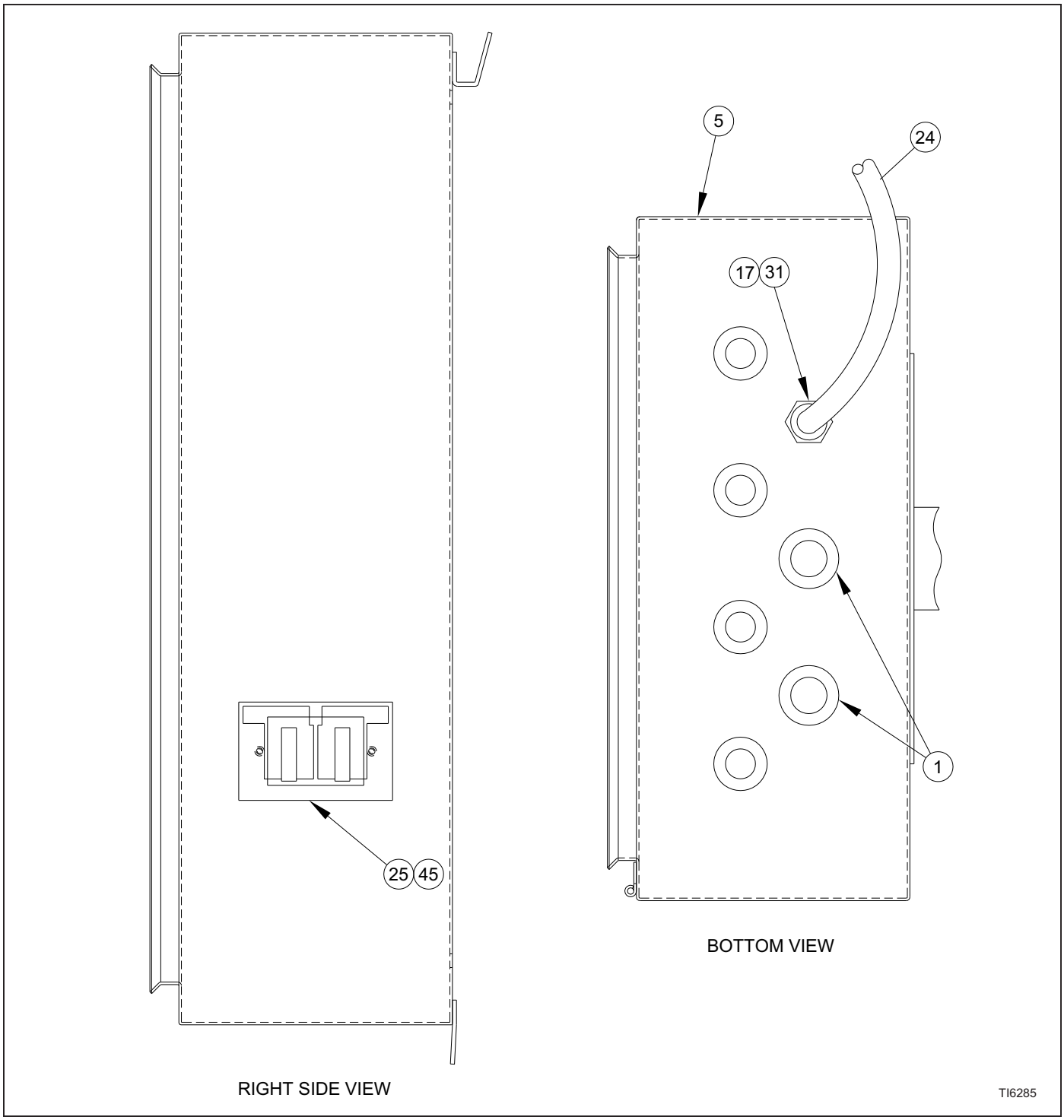

Figure 4.12 - NFPA Electrical Case:
Right Side and Bottom Views

NFPA ELECTRICAL CASE (Option)

Item	Part Number	Description	Qty
1	BP 00005490052	Hole Plug 1 Conduit Seal	2
2	BP 14031008	Transformer (Input 230/460) (Output 115V @ 750VA)	1
3	BP 00005490203	Label, NFPA Serial	1
4	7 0001502	Hex Nut 3/8-16	4
5	BPA11591331	NFPA Enclosure with Modifications	1
6	BP 11591333	Electrical Panel NFPA with Modifications	1
7	BP 11591497	Din Rail 35mm 6’ LONG	6
8	BP 00005490199	Wireway 1.5" X 3" X 6’ Lg	6
9	BP 00005490198	Wireway 1" X 3" X 6’ Lg	6
10	BP 11597386	Wireway Cover 1.5" X 6’ Lg	6
11	BP 31541773	Wireway Cover 1" X 6’ Lg"	6
12	BP 0008116TB2	ST 2.5 Quattro Terminal	19
13	BP 00005490013	ST 2.5 Quattro Pe Terminal	3
14	BP 00005490012	FBS 2-5 Plug In Bridge	1
15	BP 00005490003	FBS 3-5 Plug In Bridge	1
16	BP 00005490006	D-ST 2.5 Quattro Cover	2
17	AH 001150801	Cord Grip Lock Nut	2
18	BP 0011791DPDT	PLC Relay	1
19	BP 0010019CR	Contactor Reversing Kit	1
20	BP 0010019LR	Overload Relay	1
21	BP 0008122VR	Varistor	2
22	CK 0010019	Contactor Switch Blocks 2NO & 2NC	2
23	BP 00005490190	Contactor 3 Pole 120V 9A	3
24	BP 00005490201	16 Conductor 16 AWG SO Cord	12
25	BP 00005490076	Duplex Water Proof Cover	1
26	BP 0010018SS	Disconnect Switch Shaft	1
27	BP 0010018DH	Disconnect Switch Operating Handle	1
28	BP 0010016DS	Disconnect Switch 3 Pole 30A Fused	1
29	NV 00100160007	1 Pole 4A Circuit Breaker	3
30	BP 00100160010	1 Pole 10A Circuit Breaker	1
31	BP 00005490202	Cord Grip, Straight	2
32	LP 0011298	RC Transient Suppressor	1
33	CK 000961015	Fuse, Main 15A 600 VAC	3
34	BP 00005490197	Legend Plate, Emergency Stop	1

Item	Part Number	Description	Qty
35	ML 0010366G	Tag, Ground Symbol	5
36	BP 11591338	Weldment, Operator Remote Pendant	1
37	BP 11591370	Remote Enclosure Cover	1
38	BP 11591371	Remote Enclosure Cover Overlay	1
39	BP 11591374	Remote Enclosure Cover Gasket	1
40	BP 00005490196	Selector Switch Assembly, 3 Position Maintained	3
41	BP 00005490192	Switch Assembly, Green Illuminated Push Button	1
42	BP 00005490193	Switch Assembly, Emergency Stop Push Button	1
43	BP 00005490195	Switch Assembly, Non Illuminated Push Button	1
44	SG 000961001	Fuse, Cartridge 5A	2
45	BP 00005490075	Twist Lock Duplex Receptacle	1
46	ML 0008776FG	Terminal Cover, Transformer	1
47	BP 0003277MRSA	RC Snubber, 575 VAC	1
48	BP 00005490205	Labels, NFPA Power Case	1
49	SG 001001701	Fuseholder, 2 Pole 30 Amp 600 VAC	1
50	BP 00005490064	Cap Plug	1
51	BP 0000549ES14	Din Rail End Clamp	6
52	BP 0004158DLP1	Bracket, Disconnect Locking	1
53	BP 0004158DLP2	Lock Plate, Disconnect Locking	1
54	BPB11591350	Schematic, NFPA	1
55	BP 00005490204	Labels, Terminal Block	1
56	BP 11111912	Washer, 1/4" Flat	5
57	BP 0003277RC1	RC Suppressor	1

- NOTES -

CHAPTER 5 - SPECIFICATIONS

MACHINE

PRINCIPLE DIMENSIONS

Left Side View of Machine

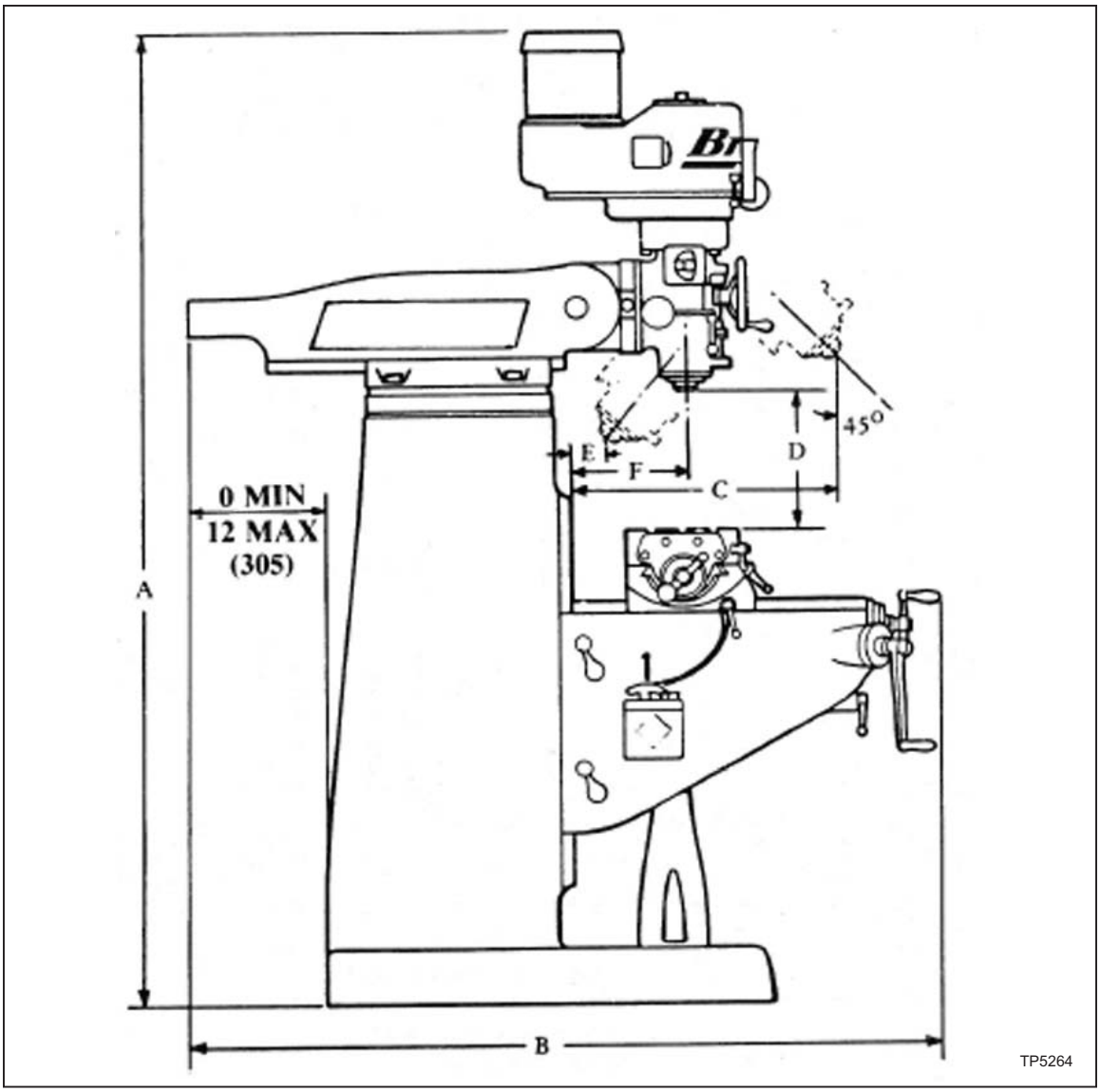

Figure 5.1 - Machine Principle Dimensions: Side View

	A	B	C	D	E	F
MIN	85.56” (2180)	51” (1295)	8.750” (222)	2.500” (64)	0	6.750” (171)
MAX	85.56” (2180)	63” (1600)	20.750” (527)	18.500” (470)	12” (305)	18.750” (476)

Note: Metric specifications in parenthesis

Top View of Machine

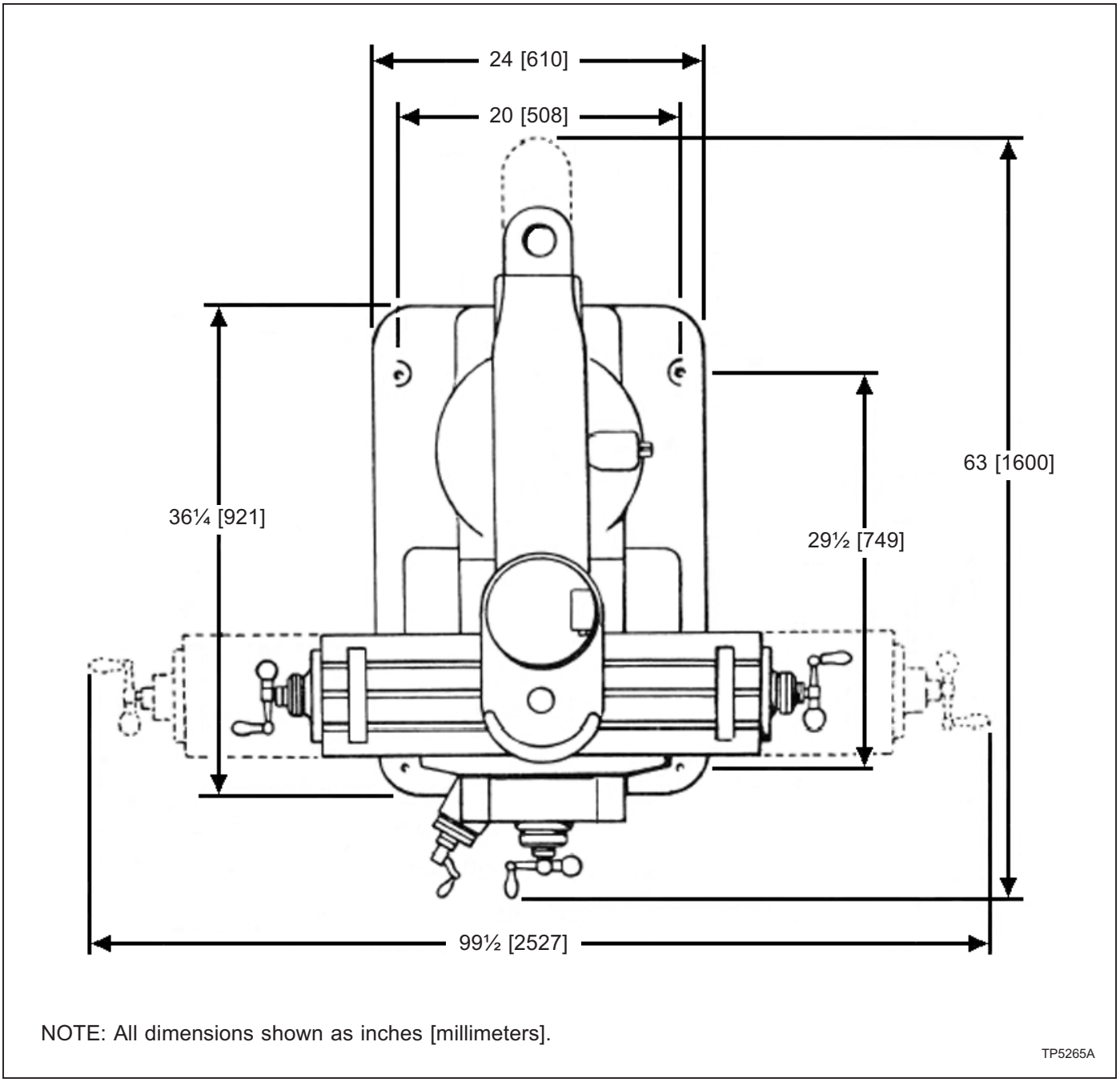

Figure 5.2 - Machine Principle Dimensions: Top View

MACHINE SPECIFICATIONS

Range	
Table Travel (X-Axis)	
without Power Feed (end of table to end of saddle)	31 in. (787 mm)
with Power Feed	33.5 in. (851 mm)
Saddle Travel (Y-Axis)	12 in. (305 mm)
Quill Travel	5 in. (127 mm)
Knee Travel (Z Axis)	
without Flood Coolant	16 in. (406 mm)
with Flood Coolant	15 in. (381 mm)
Ram Travel	12 in. (305 mm)
Throat Distance	
Minimum	6.75 in. (171 mm)
Maximum	18.75 in (476 mm)
Table to Spindle Nose Gage Line	
Minimum	2.5 in. (64 mm)
Maximum	18.25 in. (463 mm)
Table	
Overall Size	49 x 9 in. (1245 x 229 mm)
T-Slot Centers	3 @ 2.5 in. (64 mm)
T-Slot Size	.625 in. (16 mm)
Height Above Floor (Maximum)	47.25 in. (1200 mm)
Spindle (2J Head)	
Power Rating	
30 Minute Duty Cycle	3 HP (2.2 Kw)
Continuous	2 HP (1.5 Kw)
Standard Spindle	
Spindle Taper	R-8
Tooling	R-8 Collets
Optional Spindle	
Spindle Taper	#30 ISO
Tooling	Erickson Quick-Change #30 ISP
Speed Range	
High (Infinitely variable)	500 - 4200 rpm @ 60Hz
Low	60 - 500 rpm @ 60 Hz
Power Feed Quill	0.0015 in/rev (0.038 mm)
Manual Adjust	0.003 in/rev (0.076 mm)
	0.006 in/rev (0.152 mm)

Drilling Capacity	
Power Quill Feed	3/8 in. (9.5 mm)
Milling Capacity (mild steel)	2 in^3 / minute
Boring Capacity (mild steel)	6 in. dia. (152 mm)
Spindle Diameter	1.875 in. (48 mm)
Quill Diameter	3.375 in. (86 mm)
Space and Weight	
Floor Area (Power case door closed)	8.3 x 5.3 ft. (2.53 x 1.62 m)
Floor Area (Power case door open)	8.3 x 7.8 ft. (2.53 x 2.4 m)
Height	7.25 ft. (2.21 m)
Net Weight	1930 lb (875 Kg)
Shipping Weight	2075 lb (941 Kg)
Electrical Supply	
Input Voltage	208/230/460
Electrical Phase	3
Frequency	50/60 cycle
Power Capacity	4 KVA

2J-HEAD

GENERAL SPEED RECOMMENDATIONS

MATERIAL TO BE CUT	FEET PER MINUTE ROUGH CUT	ROUGH AND FINISH	LIGHT AND FINISH CUT
Cast Iron – Soft (Under 150 Brinnell)	70	80 – 90	120
Cast Iron – Med (150-200 Brinnell)	55	60 – 70	90
Cast Iron – Hard (Over 200 Brinnell)	40	50 – 60	70
Steel (Chrome Nickel 40-45 Shore)	30	40	50
Steel (Stainless)	60	80	90
Steel (Low Carbon)	80	90	140
Steel (High Carbon)	40	50	70
Bronze (Medium)	90	120	150
Bronze (Hard)	65	90	130
Brass (Hard)	100	150	200
Copper	150	200	300
Duraluminum	400		600
Aluminum	600		1000

TABLE OF CUTTING SPEEDS AND FEEDS

Feet per Minute	15	20	25	30	40	50	60	70	80	90	100
REVOLUTIONS PER MINUTE											
Ø in Inches											
.063”	917	1222	1528	1833	2445	3056	3667	4278			
.125”	458	611	764	917	1222	1528	1833	2139	2445	2750	3056
.187”	306	407	509	611	815	1019	1222	1426	1630	1833	2037
.250”	229	306	382	458	611	764	917	1070	1375	1375	1528
.312”	183	244	306	367	489	611	733	856	978	1100	1222
.375”	153	204	255	306	407	509	611	713	815	917	1019
.438”	131	175	218	262	349	437	524	611	698	786	873
.500”	115	153	191	229	306	382	458	535	611	688	764
.625”	91	122	153	183	244	306	367	428	489	550	611
.750”	76	102	127	153	204	255	306	357	407	458	509
.875”	65	87	109	131	175	218	262	306	349	393	437
1.000”	60	76	95	115	153	191	229	267	306	344	382
1.125”		67	84	102	136	170	204	238	272	306	340
1.250”		61	76	91	122	153	183	214	244	275	306
1.375”			69	83	111	139	167	194	222	250	278
1.500”			63	76	102	127	153	178	204	229	255
1.625”			60	70	94	118	141	165	188	212	235
1.750”				65	87	109	131	153	175	196	218
1.875”				61	81	102	122	143	163	183	204
2.000”					76	95	115	134	153	172	191

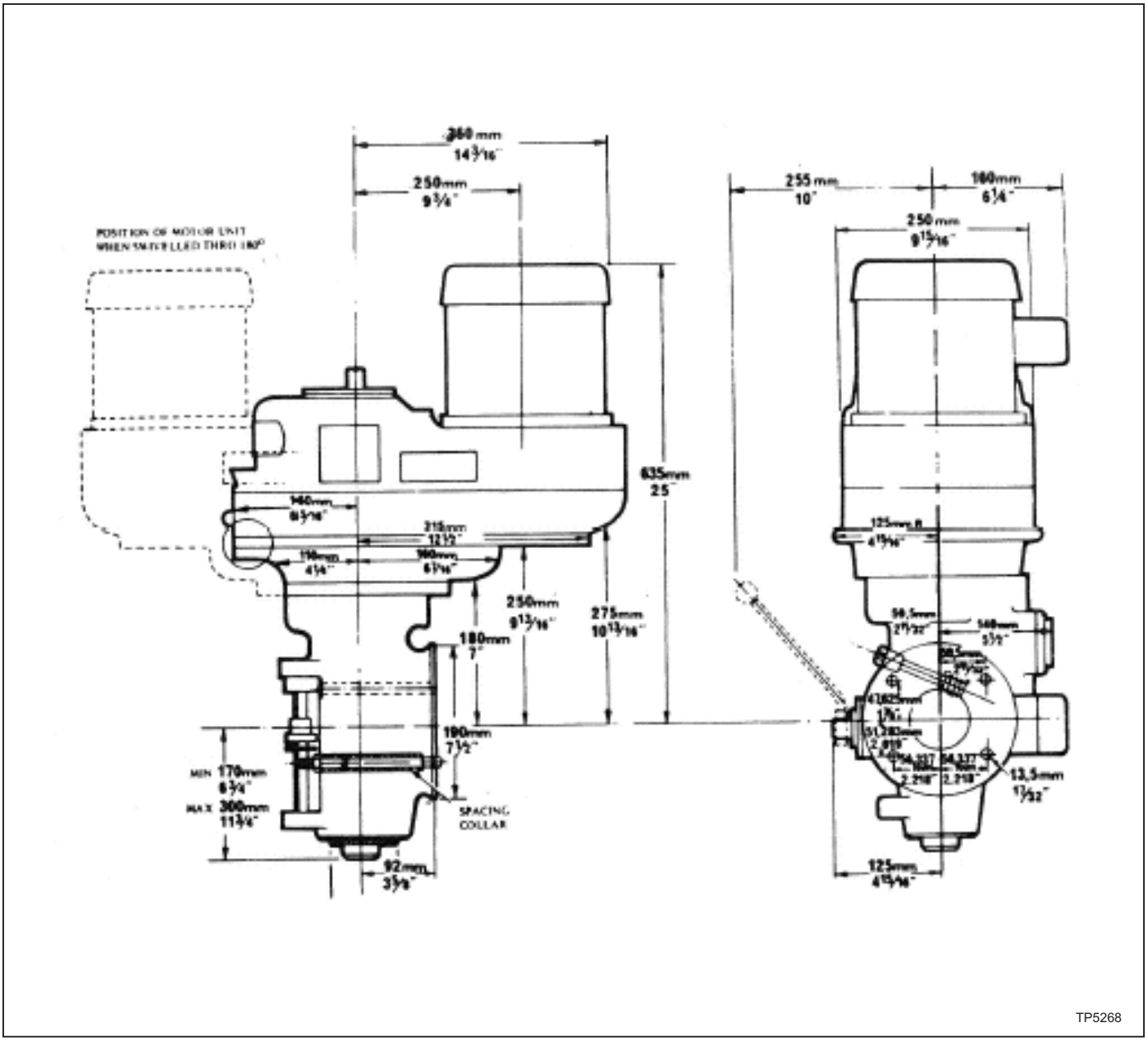

Figure 5.3 - 2J-Head Specifications

	ENGLISH	METRIC
Spindle Taper	R8	R8
Spindle Speeds – RPM	60-4200	60-4200
Motor	*2 HP	1.5 kw
Quill Travel	5”	127mm
Power Feed of Quill	.0015”	.04mm
per Rev of Spindle (3 Rates)	.003”	.08mm
	.006”	.15mm
Collet Capacity	.125” – .750” x .063”	3 – 19mm x 1.5mm
Weight	196 lb.	89 kg

*2 HP Continuous – 3 HP Intermittent

- NOTES -

- NOTES -

DOCUMENT REVISION RECORD

Date	Document Revision Level	Description
June 4, 2010	-	Initial Release.
August 3, 2011	-	Corrected table and lead screw assembly parts list.
May 23, 2014	-	Added removal of the varidisc shipping screws. Updated document format for Danger, Warning, Caution, and Notice.
July 3, 2014	-	Updated parts list: Added lubrication system for machine with splashguard option.
June 23, 2015	-	Corrected speed change handwheel illustration in Chapter 2.
August 18, 2016	-	Updated parts list for standard lubrication system.
August 25, 2016	-	Updated parts list for NFPA electrical case option.
November 18, 2016	-	Updated 2 HP spindle motor information. Updated machine height specification.
September 18, 2017	-	Corrected machine specifications.
October 31, 2017	-	Updated varidisk shipping screw information.
February 28, 2018	-	Added California Proposition 65 warning.
March 21, 2018	-	Updated part numbers for dustproof covers listed under Basic Machine in the parts list.

HARDINGE
GROUP™